SECTION GI
GENERAL INFORMATION

CONTENTS

HOW TO USE THIS MANUAL 3

HOW TO USE THIS MANUAL 3
Description 3
Terms 3
Units 3
Contents 3
Relation between Illustrations and Descriptions 4
Components 4

HOW TO FOLLOW TROUBLE DIAGNOSES..... 6
Description 6
How to Follow Test Groups in Trouble Diagnosis.....6
Key to Symbols Signifying Measurements or Procedures 7

HOW TO READ WIRING DIAGRAMS 9
Connector Symbols 9
Sample/Wiring Diagram -Example- 10
Connector Information 12

ABBREVIATIONS 14
Abbreviation List 14

TIGHTENING TORQUE OF STANDARD BOLTS 19
Description 19
Tightening Torque Table (New Standard Included) 19

RECOMMENDED CHEMICAL PRODUCTS AND SEALANTS 22
Recommended Chemical Products and Sealants...22

PRECAUTION 23

PRECAUTIONS 23
Description 23
Precaution for Supplemental Restraint System (SRS) "AIR BAG" and "SEAT BELT PRE-TENSIONER" 23
Procedures without Cowl Top Cover 23
Cautions in Removing Battery Terminal and AV Control Unit (Models with AV Control Unit) 23
General Precautions 24
Three Way Catalyst 25
Fuel (Regular Unleaded Gasoline Recommended) HR16DE 25
Multiport Fuel Injection System or Engine Control System 26
Hoses 26
Engine Oils 27
Air Conditioning 27

LIFTING POINT 28
Special Service Tool 28
Garage Jack and Safety Stand 28
2-Pole Lift 29
Board-on Lift 30

TOW TRUCK TOWING 31
Tow Truck Towing 31
Vehicle Recovery (Freeing a Stuck Vehicle) 31

VEHICLE INFORMATION 33

IDENTIFICATION INFORMATION 33
Model Variation 33
Identification Number 34
Identification Plate 35
Engine Serial Number 35
CVT Number 36
Manual Transaxle Number 36
Dimensions 36
Wheels & Tires 36

BASIC INSPECTION 37

SERVICE INFORMATION FOR ELECTRICAL INCIDENT 37
Work Flow 37
Control Units and Electrical Parts 37
How to Check Terminal 38
Intermittent Incident 41

Circuit Inspection 44

CONSULT/GST CHECKING SYSTEM 49

Description 49

Function and System Application 49

CONSULT Data Link Connector (DLC) Circuit 50

Wiring Diagram - CONSULT/GST CHECKING SYSTEM 51

HOW TO USE THIS MANUAL

HOW TO USE THIS MANUAL

Description

INFOID:0000000009472943

This volume explains “Removal, Disassembly, Installation, Inspection and Adjustment” and “Trouble Diagnoses”.

Terms

INFOID:0000000009472944

- The captions **WARNING** and **CAUTION** warn you of steps that must be followed to prevent personal injury and/or damage to some part of the vehicle.
  WARNING indicates the possibility of personal injury if instructions are not followed.
  CAUTION indicates the possibility of component damage if instructions are not followed.
  BOLD TYPED STATEMENTS except **WARNING** and **CAUTION** give you helpful information.
  Standard value: Tolerance at inspection and adjustment.
  Limit value: The maximum or minimum limit value that should not be exceeded at inspection and adjustment.

Units

INFOID:0000000009472945

- The **UNITS** given in this manual are primarily expressed as the SI UNIT (International System of Unit), and alternatively expressed in the metric system and in the yard/pound system.
  Also with regard to tightening torque of bolts and nuts, there are descriptions both about range and about the standard tightening torque.

  “Example”
  Range

  Outer Socket Lock Nut : 59 - 78 N·m (6.0 - 8.0 kg-m, 43 - 58 ft-lb)

  Standard

  Drive Shaft Installation Bolt : 44.3 N·m (4.5 kg-m, 33 ft-lb)

Contents

INFOID:0000000009472946

- **A QUICK REFERENCE INDEX**, a black tab (e.g. BR) is provided on the first page. You can quickly find the first page of each section by matching it to the section's black tab.
- **THE CONTENTS** are listed on the first page of each section.
- **THE TITLE** is indicated on the upper portion of each page and shows the part or system.
- **THE PAGE NUMBER** of each section consists of two or three letters which designate the particular section and a number (e.g. “BR-5”).
- **THE SMALL ILLUSTRATIONS** show the important steps such as inspection, use of special tools, knacks of work and hidden or tricky steps which are not shown in the previous large illustrations.
  Assembly, inspection and adjustment procedures for the complicated units such as the automatic transaxle or transmission, etc. are presented in a step-by-step format where necessary.

Relation between Illustrations and Descriptions

INFOID:0000000009472947

The following sample explains the relationship between the part description in an illustration, the part name in the text and the service procedures.

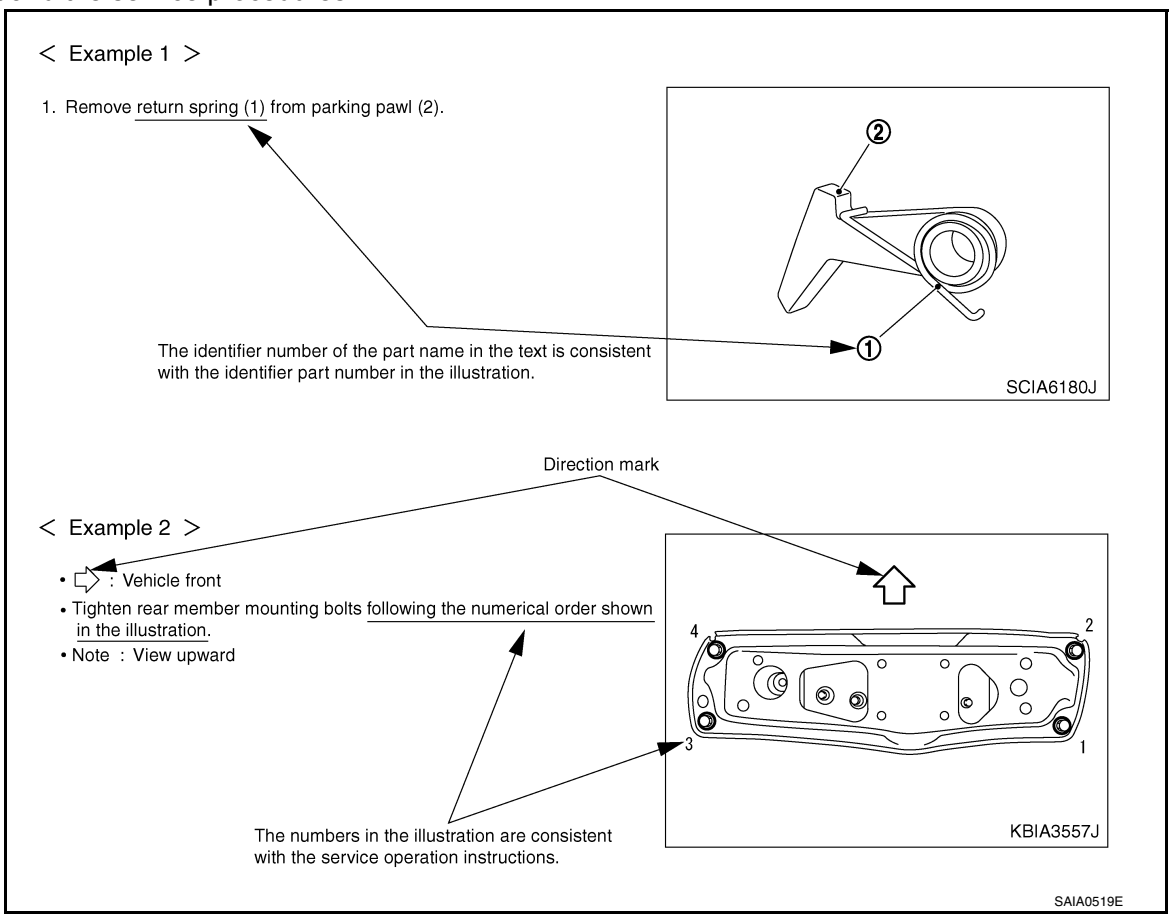

Components

INFOID:0000000009472948

- **THE LARGE ILLUSTRATIONS** are exploded views (see the following) and contain tightening torques, lubrication points, section number of the **PARTS CATALOG** (e.g. SEC. 440) and other information necessary to perform repairs.
  The illustrations should be used in reference to service matters only. When ordering parts, refer to the appropriate **PARTS CATALOG**.
  Components shown in an illustration may be identified by a circled number. When this style of illustration is used, the text description of the components will follow the illustration.

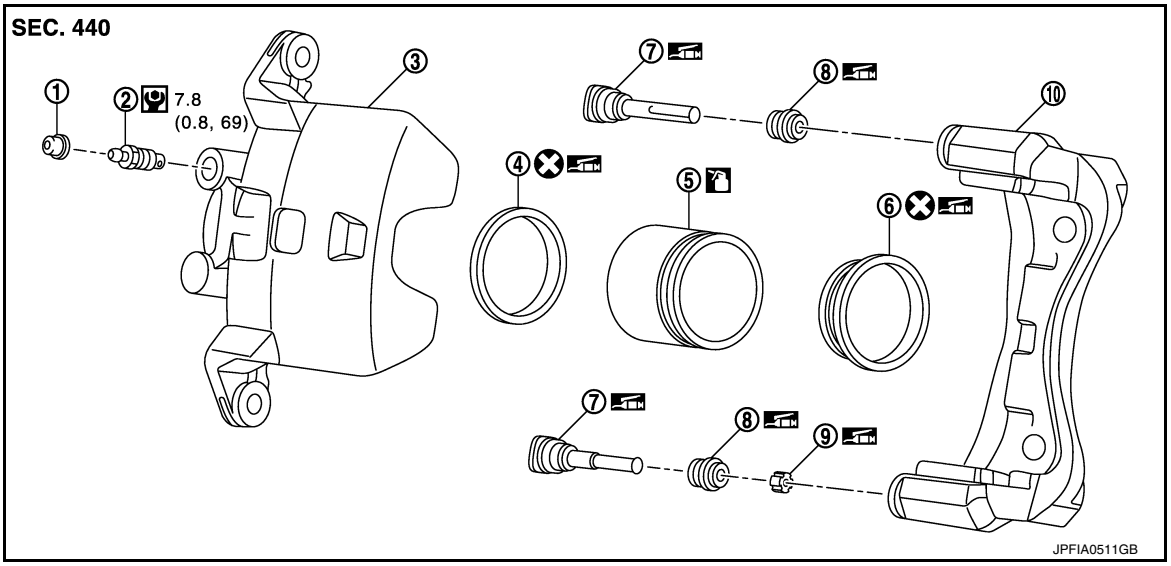

1. Cap
2. Bleeder valve
3. Cylinder body
4. Piston seal
5. Piston
6. Piston boot
7. Sliding pin
8. Sliding pin boot
9. Bushing
10. Torque member

: Apply rubber grease.

: Apply brake fluid.

: N·m (kg-m, in-lb)

: Always replace after every disassembly

SYMBOLS

SYMBOL	DESCRIPTION		SYMBOL	DESCRIPTION
	Tightening torque The tightening torque specifications of bolts and nuts may be presented as either a range or a standard tightening torque.	: N•m (kg-m, ft-lb)		Always replace after every disassembly.
		: N•m (kg-m, in-lb)	Ⓟ	Apply petroleum jelly.
	Should be lubricated with grease. Unless otherwise indicated, use recommended multi-purpose grease.		Ⓜ	Apply molybdenum added petroleum jelly.
	Should be lubricated with oil.		ATF	Apply ATF.
	Sealing point		★	Select with proper thickness.
Ⓛ	Sealing point with locking sealant.		☆	Adjustment is required.
	Checking point			

SAIA0749E

HOW TO FOLLOW TROUBLE DIAGNOSES

Description

INFOID:0000000009472949

NOTICE:
Trouble diagnoses indicate work procedures required to diagnose problems effectively. Observe the following instructions before diagnosing.

- Before performing trouble diagnoses, read the “Work Flow” in each section.
- After repairs, re-check that the problem has been completely eliminated.
- Refer to Component Parts and Harness Connector Location for the Systems described in each section for identification/location of components and harness connectors.
- When checking circuit continuity, ignition switch should be OFF.
- Refer to the Circuit Diagram for quick pinpoint check.
  If you need to check circuit continuity between harness connectors in more detail, such as when a sub-harness is used, refer to Wiring Diagram in each individual section and Harness Layout in PG section for identification of harness connectors.
- Before checking voltage at connectors, check battery voltage.
- After accomplishing the Diagnosis Procedures and Electrical Components Inspection, make sure that all harness connectors are reconnected as they were.

How to Follow Test Groups in Trouble Diagnosis

INFOID:0000000009472950

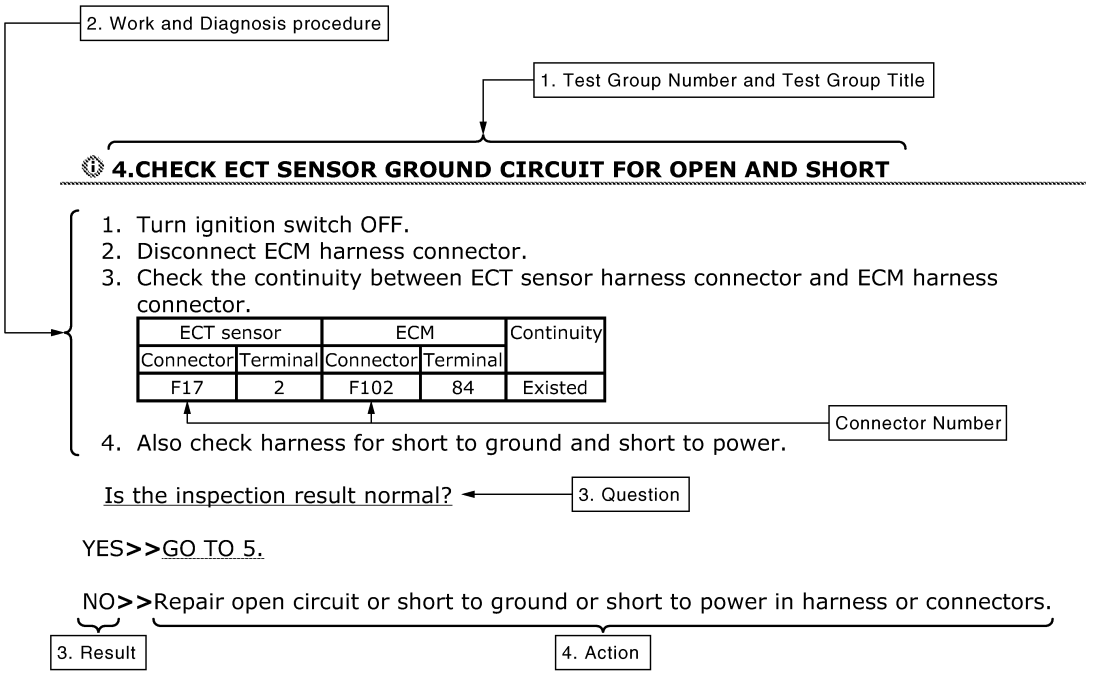

JPAIA0021GB

1. Test group number and test group title
   - Test group number and test group title are shown in the upper portion of each test group.
2. Work and diagnosis procedure
   - Start to diagnose a problem using procedures indicated in enclosed test groups.
3. Questions and results
   - Questions and required results are indicated in test group.
4. Action
   - Next action for each test group is indicated based on result of each question.

Key to Symbols Signifying Measurements or Procedures

INFOID:0000000009472951

SYMBOL	DESCRIPTION	SYMBOL	DESCRIPTION
	Check after disconnecting the connector to be measured.	GST	Procedure with Generic Scan Tool. (GST, OBD-II scan tool)
	Check after connecting the connector to be measured.	NO TOOLS	Procedure without CONSULT or GST
	Insert key into ignition switch.	A/C OFF	A/C switch is “OFF”.
	Remove key from ignition switch.	A/C ON	A/C switch is “ON”.
	Insert and remove key repeatedly.		REC switch is “ON”.
OFF	Turn ignition switch to “OFF” position.		REC switch is “OFF”.
ACC	Turn ignition switch to “ACC” position.	0 1 2 3 4	Fan switch is “ON”. (At any position except for “OFF” position)
ON	Turn ignition switch to “ON” position.	0 1 2 3 4	Fan switch is “OFF”.
ST	Turn ignition switch to “START” position.	FUSE	Apply fuse.
OFF ACC	Turn ignition switch from “OFF” to “ACC” position.	FUSE BAT	Apply positive voltage from battery with fuse directly to components.
ACC ON	Turn ignition switch from “ACC” to “ON” position.		
ACC OFF	Turn ignition switch from “ACC” to “OFF” position.		

JPAIA0982GB

SYMBOL	DESCRIPTION	SYMBOL	DESCRIPTION
OFF ON	Turn ignition switch from “OFF” to “ON” position.		Drive vehicle.
ON OFF	Turn ignition switch from “ON” to “OFF” position.		
	Do not start engine, or check with engine stopped.	BAT	Disconnect battery negative cable.
	Start engine, or check with engine running.		Depress brake pedal.
	Apply parking brake.		Release brake pedal.
	Release parking brake.		Depress accelerator pedal.
C H	Check after engine is warmed up sufficiently.		Release accelerator pedal.
V	Voltage should be measured with a voltmeter.	H.S. 8 V	Pin terminal check for SMJ type ECM or TCM connectors. **For details regarding the terminal arrangement, refer to the “ELECTRICAL UNITS” electrical reference page at the end of the manual.**
Ω	Circuit resistance should be measured with an ohmmeter.		
A	Current should be measured with an ammeter.		
	Pulse signal should be checked with an oscilloscope.		
	Procedure with CONSULT		
	Procedure without CONSULT		
P	Place selector lever in “P” position.		
N	Place selector lever in “N” position.		
	Jack up front portion.		
	Jack up rear portion.		
	Inspect under engine room.		
	Inspect under floor.		
	Inspect rear under floor.		

JSAIA1461GB

HOW TO READ WIRING DIAGRAMS

Connector Symbols

INFOID:0000000009472952

Most of connector symbols in wiring diagrams are shown from the terminal side.

- Connector symbols shown from the terminal side are enclosed by a single line and followed by the direction mark.
- Connector symbols shown from the harness side are enclosed by a double line and followed by the direction mark.
- Certain systems and components, especially those related to OBD, may use a new style slide-locking type harness connector. For description and how to disconnect, refer to PG section, “Description”, “HARNESS CONNECTOR”.

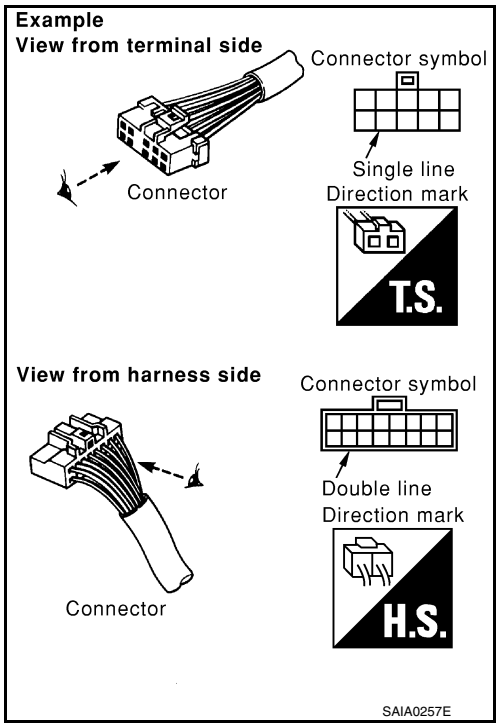

- Male and female terminals
  Connector guides for male terminals are shown in black and female terminals in white in wiring diagrams.

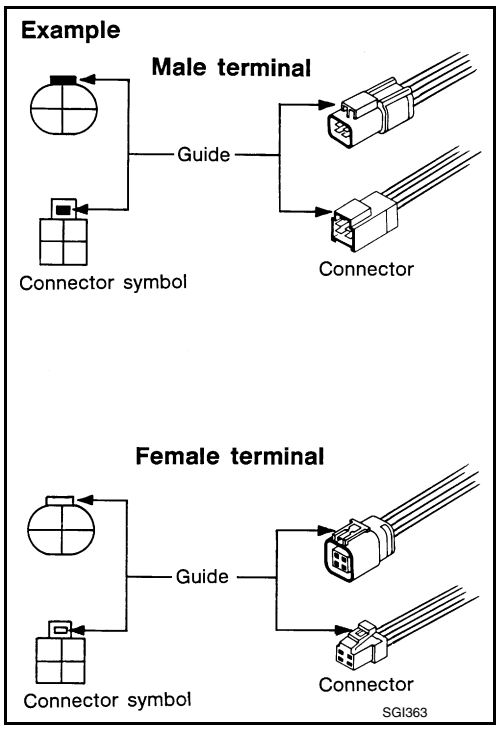

Sample/Wiring Diagram -Example-

INFOID:0000000009472953

Each section includes wiring diagrams.

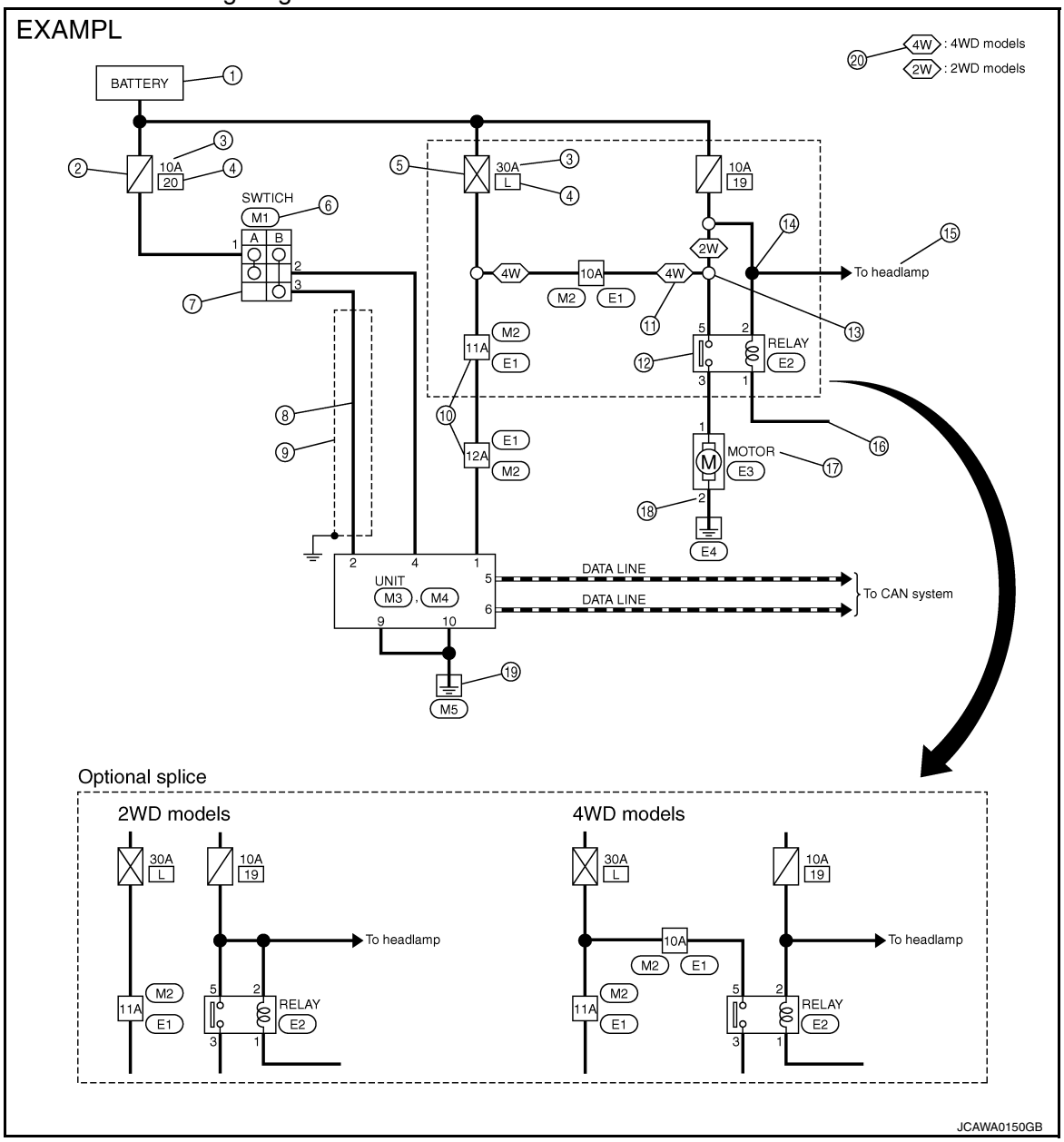

Description

Number	Item	Description
1	Power supply	• This means the power supply of fusible link or fuse.
2	Fuse	• "/" means the fuse.
3	Current rating of fusible link/fuse	• This means the current rating of the fusible link or fuse.
4	Number of fusible link/ fuse	• This means the number of fusible link or fuse location.
5	Fusible link	• "X" means the fusible link.
6	Connector number	• Alphabetic characters show to which harness the connector is placed. • Numeric characters show the identification number of connectors.
7	Switch	• This shows that continuity exists between terminals 1 and 2 when the switch is in the A position. Continuity exists between terminals 1 and 3 when the switch is in the B position.
8	Circuit (Wiring)	• This means the wiring.

Number	Item	Description
9	Shielded line	• The line enclosed by broken line circle shows shield wire.
10	Connectors	• This means that a transmission line bypasses two connectors or more.
11	Option abbreviation	• This means the vehicle specifications which layouts the circuit between “○”.
12	Relay	• This shows an internal representation of the relay.
13	Optional splice	• The open circle shows that the splice is optional depending on vehicle application.
14	Splice	• The shaded circle “●” means the splice.
15	System branch	• This shows that the circuit is branched to other systems.
16	Page crossing	• This circuit continues to an adjacent page.
17	Component name	• This shows the name of a component.
18	Terminal number	• This means the terminal number of a connector.
19	Ground (GND)	• This shows the ground connection.
20	Explanation of option description	• This shows a description of the option abbreviation used on the page.

SWITCH POSITIONS

Switches are shown in wiring diagrams as if the vehicle is in the “normal” condition.
A vehicle is in the “normal” condition when:

- ignition switch is “OFF”
- doors, hood and trunk lid/back door are closed
- pedals are not depressed
- parking brake is released

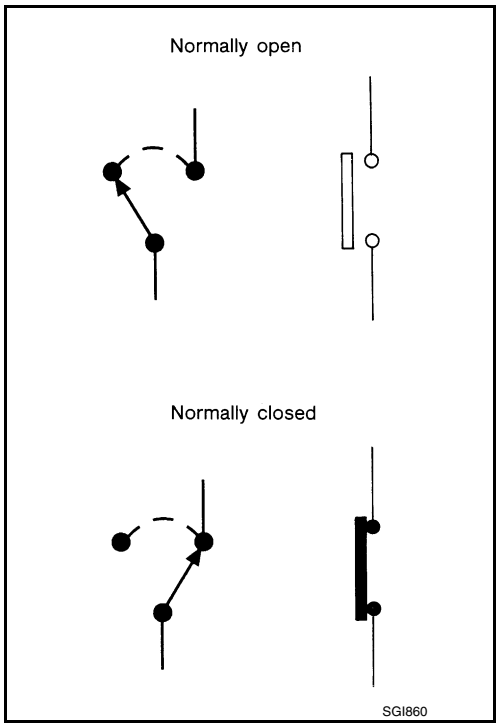

MULTIPLE SWITCH

The continuity of multiple switch is described in two ways as shown below.

- The switch chart is used in schematic diagrams.

- The switch diagram is used in wiring diagrams.

Example

(SWITCH CHART)

WIPER SWITCH

	OFF	INT	LO	HI	WASH
1					○
2				○	
3	○	○	○		
4	○	○			
5		○			
6		○	○	○	○

(SWITCH DIAGRAM)

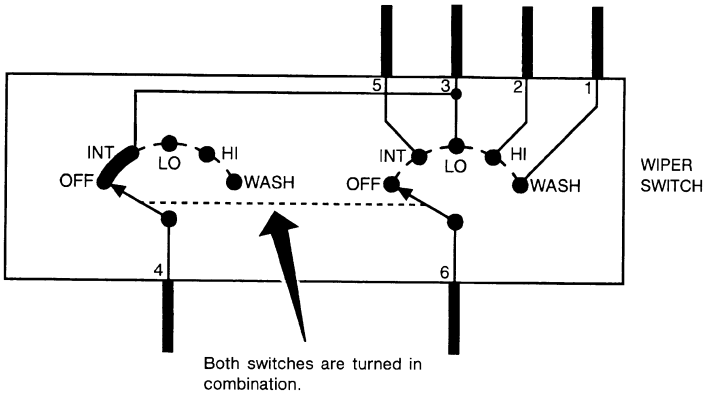

Continuity circuit of wiper switch

SWITCH POSITION	CONTINUITY CIRCUIT
OFF	3-4
INT	3-4, 5-6
LO	3-6
HI	2-6
WASH	1-6

JSAIA0017GB

Connector Information

INFOID:0000000009472954

HOW TO USE CONNECTOR INFORMATION

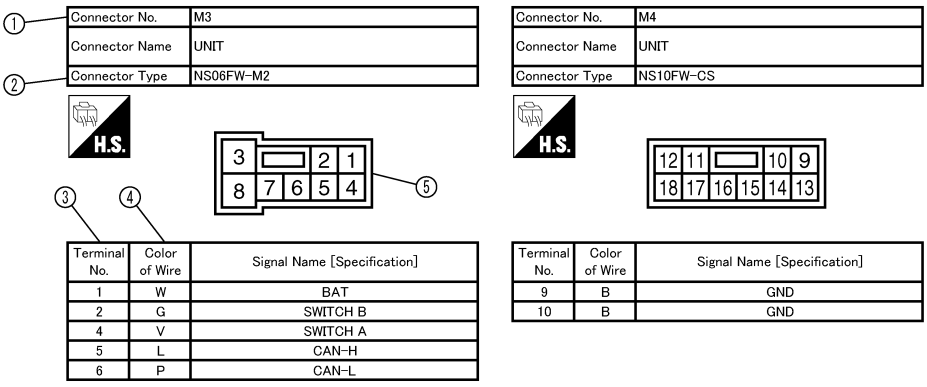

JCAWA0152GB

Description

Number	Item	Description
1	Connector number	• Alphabetic characters show to which harness the connector is placed. • Numeric characters show the identification number of connectors.
2	Connector type	• This means the connector number.
3	Terminal number	• This means the terminal number of a connector.

Number	Item	Description
4	Wire color	• This shows a code for the color of the wire.
		B = Black W = White R = Red G = Green L = Blue Y = Yellow LG = Light Green BG = Beige BR = Brown OR or O = Orange P = Pink PU or V (Violet) = Purple GY or GR = Gray SB = Sky Blue CH = Dark Brown DG = Dark Green
		• When the wire color is striped, the base color is given first, followed by the stripe color as shown below: Example: L/W = Blue with White Stripe
5	Connector	• This means the connector information. • This unit-side is described by the connector symbols.

ABBREVIATIONS

Abbreviation List

INFOID:0000000009472955

The following **ABBREVIATIONS** are used:

A

ABBREVIATION	DESCRIPTION
A/C	Air conditioner
A/C	Air conditioning
A/F sensor	Air fuel ratio sensor
A/T	Automatic transaxle/transmission
ABS	Anti-lock braking system
ACCS	Advance climate control system
ACL	Air cleaner
AP	Accelerator pedal
APP	Accelerator pedal position
ATF	Automatic transmission fluid
AV	Audio visual
AWD	All wheel drive

B

ABBREVIATION	DESCRIPTION
BARO	Barometric pressure
BCM	Body control module
BLSD	Brake limited slip differential
BPP	Brake pedal position
BSW	Blind spot warning

C

ABBREVIATION	DESCRIPTION
CKP	Crankshaft position
CL	Closed loop
CMP	Camshaft position
CPP	Clutch pedal position
CTP	Closed throttle position
CVT	Continuously variable transaxle/transmission

D

ABBREVIATION	DESCRIPTION
D_1	Drive range first gear
D_2	Drive range second gear
D_3	Drive range third gear
D_4	Drive range fourth gear
DCA	Distance control assist
DDS	Downhill drive support
DFI	Direct fuel injection system
DLC	Data link connector
DTC	Diagnostic trouble code

E

ABBREVIATION	DESCRIPTION
E/T	Exhaust temperature
EBD	Electric brake force distribution
EC	Engine control
ECL	Engine coolant level
ECM	Engine control module
ECT	Engine coolant temperature
ECV	Electrical control valve
EEPROM	Electrically erasable programmable read only memory
EFT	Engine fuel temperature
EGR	Exhaust gas recirculation
EGRT	Exhaust gas recirculation temperature
EGT	Exhaust gas temperature
EOP	Engine oil pressure
EP	Exhaust pressure
EPR	Exhaust pressure regulator
EPS	Electronically controlled power steering
ESP	Electronic stability program system
EVAP canister	Evaporative emission canister
EVSE	Electric vehicle supply equipment
EXC	Exhaust control

F

ABBREVIATION	DESCRIPTION
FC	Fan control
FCW	Forward collision warning
FIC	Fuel injector control
FP	Fuel pump
FR	Front
FRP	Fuel rail pressure
FRT	Fuel rail temperature
FTP	Fuel tank pressure
FTT	Fuel tank temperature

G

ABBREVIATION	DESCRIPTION
GND	Ground
GPS	Global positioning system
GST	Generic scan tool

H

ABBREVIATION	DESCRIPTION
HBMC	Hydraulic body-motion control system
HDD	Hard disk drive
HO2S	Heated oxygen sensor
HOC	Heated oxidation catalyst
HPCM	Hybrid power train control module

I

ABBREVIATION	DESCRIPTION
I/M	Inspection and maintenance
IA	Intake air
IAC	Idle air control
IAT	Intake air temperature
IBA	Intelligent brake assist
IC	Ignition control
ICC	Intelligent cruise control
ICM	Ignition control module
IPDM E/R	Intelligent power distribution module engine room
ISC	Idle speed control
ISS	Input shaft speed

K

ABBREVIATION	DESCRIPTION
KS	Knock sensor

L

ABBREVIATION	DESCRIPTION
LBC	Li-ion battery controller
LCD	Liquid crystal display
LCU	Local control unit
LDP	Lane departure prevention
LDW	Lane departure warning
LED	Light emitting diode
LH	Left-hand
LIN	Local interconnect network

M

ABBREVIATION	DESCRIPTION
M/T	Manual transaxle/transmission
MAF	Mass airflow
MAP	Manifold absolute pressure
MDU	Multi display unit
MI	Malfunction indicator
MIL	Malfunction indicator lamp

N

ABBREVIATION	DESCRIPTION
NOX	Nitrogen oxides

O

ABBREVIATION	DESCRIPTION
O2	Oxygen
O2S	Oxygen sensor
OBD	On board diagnostic
OC	Oxidation catalytic converter
OD	Overdrive
OL	Open loop
OSS	Output shaft speed

P

ABBREVIATION	DESCRIPTION
P/S	Power steering
PBR	Potentio balance resistor
PCV	Positive crankcase ventilation
PNP	Park/Neutral position
PSP	Power steering pressure
PTC	Positive temperature coefficient
PTO	Power takeoff
PWM	Pulse width modulation

R

ABBREVIATION	DESCRIPTION
RAM	Random access memory
RAS	Rear active steer
RH	Right-hand
ROM	Read only memory
RPM	Engine speed
RR	Rear

S

ABBREVIATION	DESCRIPTION
SAE	Society of Automotive Engineers, Inc.
SCK	Serial clock
SDS	Service Data and Specifications
SRT	System readiness test
SST	Special Service Tools

T

ABBREVIATION	DESCRIPTION
TC	Turbocharger
TCM	Transmission control module
TCS	Traction control system
TCU	Telematics communication unit
TP	Throttle position
TPMS	Tire pressure monitoring system
TSS	Turbine shaft speed
TWC	Three way catalytic converter

U

ABBREVIATION	DESCRIPTION
USS	Uphill start support

V

ABBREVIATION	DESCRIPTION
VCM	Vehicle control module
VDC	Vehicle dynamics control system
VIN	Vehicle identification number
VSS	Vehicle speed sensor

W

ABBREVIATION	DESCRIPTION
WOT	Wide open throttle

1

ABBREVIATION	DESCRIPTION
1_1	1st range first gear
1_2	1st range second gear
1GR	First gear

2

ABBREVIATION	DESCRIPTION
2_1	2nd range first gear
2_2	2nd range second gear
2GR	Second gear
2WD	2-wheel drive

3

ABBREVIATION	DESCRIPTION
3GR	Third gear

4

ABBREVIATION	DESCRIPTION
4GR	Fourth gear
4WAS	Four wheel active steer
4WD	Four wheel drive

5

ABBREVIATION	DESCRIPTION
5GR	Fifth gear

6

ABBREVIATION	DESCRIPTION
6GR	Sixth gear

7

ABBREVIATION	DESCRIPTION
7GR	Seventh gear

TIGHTENING TORQUE OF STANDARD BOLTS

Description

INFOID:0000000009472956

This vehicle has both new standard based on ISO* and previous standard bolts/nuts. There are some differences between these two types of bolts/ nuts; shape of the head, grade of strength, hexagonal width across flats and the standard tightening torque.

- For guidance in discriminating, refer to GI-19, "Tightening Torque Table (New Standard Included)".
- If the tightening torque is not described in the description or figure, refer to GI-19, "Tightening Torque Table (New Standard Included)".

*ISO: International Organization for Standardization

Tightening Torque Table (New Standard Included)

INFOID:0000000009472957

CAUTION:

- **The special parts are excluded.**
- **The bolts/nuts in these tables have a strength (discrimination) number/symbol assigned to the head or the like. As to the relation between the strength grade in these tables and the strength (discrimination) number/symbol, refer to “DISCRIMINATION OF BOLTS AND NUTS”.**

PREVIOUS STANDARD

Grade (Strength grade)	Bolt size	Bolt diameter mm	Hexagonal width across flats mm	Pitch mm	Tightening torque (Without lubricant)							
					Hexagon head bolt				Hexagon flange bolt			
					N·m	kg-m	ft-lb	in-lb	N·m	kg-m	ft-lb	in-lb
4T	M6	6.0	10	1.0	5.5	0.56	4	49	7	0.71	5	62
	M8	8.0	12	1.25	13.5	1.4	10	—	17	1.7	13	—
				1.0	13.5	1.4	10	—	17	1.7	13	—
	M10	10.0	14	1.5	28	2.9	21	—	35	3.6	26	—
				1.25	28	2.9	21	—	35	3.6	26	—
	M12	12.0	17	1.75	45	4.6	33	—	55	5.6	41	—
				1.25	45	4.6	33	—	65	6.6	48	—
	M14	14.0	19	1.5	80	8.2	59	—	100	10	74	—
7T	M6	6.0	10	1.0	9	0.92	7	80	11	1.1	8	97
	M8	8.0	12	1.25	22	2.2	16	—	28	2.9	21	—
				1.0	22	2.2	16	—	28	2.9	21	—
	M10	10.0	14	1.5	45	4.6	33	—	55	5.6	41	—
				1.25	45	4.6	33	—	55	5.6	41	—
	M12	12.0	17	1.75	80	8.2	59	—	100	10	74	—
				1.25	80	8.2	59	—	100	10	74	—
	M14	14.0	19	1.5	130	13	96	—	170	17	125	—
9T	M6	6.0	10	1.0	11	1.1	8	—	13.5	1.4	10	—
	M8	8.0	12	1.25	28	2.9	21	—	35	3.6	26	—
				1.0	28	2.9	21	—	35	3.6	26	—
	M10	10.0	14	1.5	55	5.6	41	—	80	8.2	59	—
				1.25	55	5.6	41	—	80	8.2	59	—
	M12	12.0	17	1.75	100	10	74	—	130	13	96	—
				1.25	100	10	74	—	130	13	96	—
	M14	14.0	19	1.5	170	17	125	—	210	21	155	—

CAUTION:

The parts with aluminum or the cast iron washer surface/thread surface are excluded.

NEW STANDARD BASED ON ISO

Grade (Strength grade)	Bolt size	Bolt diameter mm	Hexagonal width across flats mm	Pitch mm	Tightening torque							
					Hexagon head bolt				Hexagon flange bolt			
					N·m	kg-m	ft-lb	in-lb	N·m	kg-m	ft-lb	in-lb
4.8 (Without lubricant)	M6	6.0	10	1.0	5.5	0.56	4	49	7	0.71	5	62
	M8	8.0	13	1.25	13.5	1.4	10	—	17	1.7	13	—
				1.0	13.5	1.4	10	—	17	1.7	13	—
	M10	10.0	16	1.5	28	2.9	21	—	35	3.6	26	—
				1.25	28	2.9	21	—	35	3.6	26	—
	M12	12.0	18	1.75	45	4.6	33	—	55	5.6	41	—
				1.25	45	4.6	33	—	65	6.6	48	—
	M14	14.0	21	1.5	80	8.2	59	—	100	10	74	—
4.8 (With lubricant)	M6	6.0	10	1.0	4	0.41	3	35	5.5	0.56	4	49
	M8	8.0	13	1.25	11	1.1	8	—	13.5	1.4	10	—
				1.0	11	1.1	8	—	13.5	1.4	10	—
	M10	10.0	16	1.5	22	2.2	16	—	28	2.9	21	—
				1.25	22	2.2	16	—	28	2.9	21	—
	M12	12.0	18	1.75	35	3.6	26	—	45	4.6	33	—
				1.25	35	3.6	26	—	45	4.6	33	—
	M14	14.0	21	1.5	65	6.6	48	—	80	8.2	59	—
8.8 (With lubricant)	M6	6.0	10	1.0	8	0.82	6	71	10	1.0	7	89
	M8	8.0	13	1.25	21	2.1	15	—	25	2.6	18	—
				1.0	21	2.1	15	—	25	2.6	18	—
	M10	10.0	16	1.5	40	4.1	30	—	50	5.1	37	—
				1.25	40	4.1	30	—	50	5.1	37	—
	M12	12.0	18	1.75	70	7.1	52	—	85	8.7	63	—
				1.25	70	7.1	52	—	85	8.7	63	—
	M14	14.0	21	1.5	120	12	89	—	140	14	103	—
10.9 (With lubricant)	M6	6.0	10	1.0	10	1.0	7	89	12	1.2	9	106
	M8	8.0	13	1.25	27	2.8	20	—	32	3.3	24	—
				1.0	27	2.8	20	—	32	3.3	24	—
	M10	10.0	16	1.5	55	5.6	41	—	65	6.6	48	—
				1.25	55	5.6	41	—	65	6.6	48	—
	M12	12.0	18	1.75	95	9.7	70	—	110	11	81	—
				1.25	95	9.7	70	—	110	11	81	—
	M14	14.0	21	1.5	160	16	118	—	180	18	133	—

CAUTION:

1. **Use tightening torque with lubricant for the new standard bolts/nuts in principle. Friction coefficient stabilizer is applied to the new standard bolts/nuts.**
2. **However, use tightening torque without lubricant for the following cases. Friction coefficient stabilizer is not applied to the following bolts/nuts.**

- **Grade 4.8, M6 size bolt, Conical spring washer installed**
- **Paint removing nut (Size M6 and M8) for fixing with weld bolt**

DISCRIMINATION OF BOLTS AND NUTS

BOLTS

	Grade (Strength)	Discrimination	
Previous standard	4T (392N/mm²)	4	(No number/ symbol)
	7T (686N/mm²)	7	
	9T (883N/mm²)	9	
New Standard	4.8 (420N/mm²)	4.8	(No number/ symbol)
	8.8 (800N/mm²)	8.8	
	10.9 (1040N/mm²)	10.9	

NUTS

	Grade (Proof load stress)	Discrimination		
Previous standard	7N (686N/mm²)	(No number/ symbol)		
	9N (883N/mm²)	9		
New Standard	8 (800N/mm²)	8		(No number/ symbol)
	10 (1040N/mm²)	10		

NOTICE:
- A number is assigned on the side of the nuts in some cases.
- A number or symbol is assigned on the upper surface of the flange for the nut with flange.

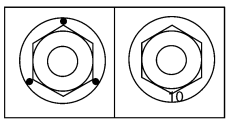

MACHINE SCREWS AND TAPPING SCREWS

Shape of the head :
Cross recess for the previous standard
Torx recess for the new standard

Screw size	Screw diameter	Torx size
M4	4.0	T20
M5	5.0	T20
M6	6.0	T30

NOTICE:
Use torx size T20 (united with M4 screw) for M5 screw although ISO standard specifies T25.

SAIA0453E

RECOMMENDED CHEMICAL PRODUCTS AND SEALANTS

Recommended Chemical Products and Sealants

INFOID:0000000009472958

Refer to the following chart for help in selecting the appropriate chemical product or sealant.

	Product Description	Purpose	NISSAN North America Part No. (USA)	NISSAN Canada Part No. (Canada)	Aftermarket Cross-reference Part Nos.
1	Rear View Mirror Adhesive	Used to permanently remount rear view mirrors to windows.	999MP-AM000P	99998-50505	Permatex 81844
2	Anaerobic Liquid Gasket	For metal-to-metal flange sealing. Can fill a 0.38 mm (0.015 inch) gap and provide instant sealing for most powertrain applications.	999MP-AM001P	99998-50503	Permatex 51813 and 51817
3	High Performance Thread Sealant	Provides instant sealing on any threaded straight or parallel threaded fitting. (Thread sealant only, no locking ability.) • Do not use on plastic.	999MP-AM002P	999MP-AM002P	Permatex 56521
4	Silicone RTV	Gasket Maker	999MP-AM003P (Ultra Grey)	99998-50506 (Ultra Grey)	Permatex Ultra Grey 82194; Three Bond 1207,1215, 1216, 1217F, 1217G and 1217H Nissan RTV Part No. 999MP-A7007
5	High Temperature, High Strength Thread Locking Sealant (Red)	Threadlocker	999MP-AM004P	999MP-AM004P	Permatex 27200; Three Bond 1360, 1360N, 1305 N&P, 1307N, 1335, 1335B, 1363B, 1377C, 1386B, D&E and 1388 Loctite 648
6	Medium Strength Thread Locking Sealant (Blue)	Threadlocker (service tool removable)	999MP-AM005P	999MP-AM005P	Permatex 24200, 24206, 24240, 24283 and 09178; Three Bond 1322, 1322N, 1324 D&N, 1333D, 1361C, 1364D, 1370C and 1374

PRECAUTION

PRECAUTIONS

Description

INFOID:0000000009472959

Observe the following precautions to ensure safe and proper servicing. These precautions are not described in each individual section.

Precaution for Supplemental Restraint System (SRS) "AIR BAG" and "SEAT BELT PRE-TENSIONER"

INFOID:0000000009726154

The Supplemental Restraint System such as “AIR BAG” and “SEAT BELT PRE-TENSIONER”, used along with a front seat belt, helps to reduce the risk or severity of injury to the driver and front passenger for certain types of collision. Information necessary to service the system safely is included in the SR and SB section of this Service Manual.

WARNING:

- **To avoid rendering the SRS inoperative, which could increase the risk of personal injury or death in the event of a collision which would result in air bag inflation, all maintenance must be performed by an authorized NISSAN/INFINITI dealer.**
- **Improper maintenance, including incorrect removal and installation of the SRS, can lead to personal injury caused by unintentional activation of the system. For removal of Spiral Cable and Air Bag Module, see the SR section.**
- **Do not use electrical test equipment on any circuit related to the SRS unless instructed to in this Service Manual. SRS wiring harnesses can be identified by yellow and/or orange harnesses or harness connectors.**

PRECAUTIONS WHEN USING POWER TOOLS (AIR OR ELECTRIC) AND HAMMERS

WARNING:

- **When working near the Airbag Diagnosis Sensor Unit or other Airbag System sensors with the Ignition ON or engine running, DO NOT use air or electric power tools or strike near the sensor(s) with a hammer. Heavy vibration could activate the sensor(s) and deploy the air bag(s), possibly causing serious injury.**
- **When using air or electric power tools or hammers, always switch the Ignition OFF, disconnect the battery and wait at least three minutes before performing any service.**

Procedures without Cowl Top Cover

INFOID:0000000009472961

When performing the procedure after removing cowl top cover, cover the lower end of windshield with urethane, etc.

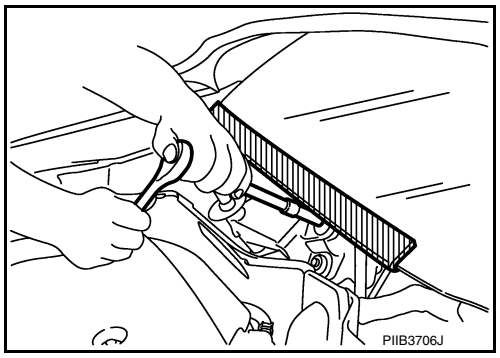

Cautions in Removing Battery Terminal and AV Control Unit (Models with AV Control Unit)

INFOID:0000000009472962

CAUTION:

Remove battery terminal and AV control unit after a lapse of 30 seconds or more after turning the ignition switch OFF.

NOTE:

After the ignition switch is turned OFF, the AV control unit continues operating for approximately 30 seconds. Therefore, data corruption may occur if battery voltage is cut off within 30 seconds.

General Precautions

INFOID:0000000009472963

- Do not operate the engine for an extended period of time without proper exhaust ventilation.
  Keep the work area well ventilated and free of any inflammable materials. Special care should be taken when handling any inflammable or poisonous materials, such as gasoline, refrigerant gas, etc. When working in a pit or other enclosed area, be sure to properly ventilate the area before working with hazardous materials.
  Do not smoke while working on the vehicle.

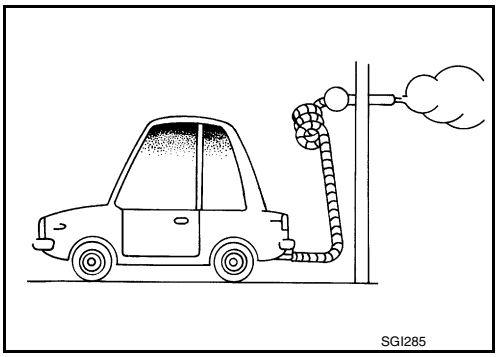

- Before jacking up the vehicle, apply wheel chocks or other tire blocks to the wheels to prevent the vehicle from moving. After jacking up the vehicle, support the vehicle weight with safety stands at the points designated for proper lifting before working on the vehicle.
  These operations should be done on a level surface.
- When removing a heavy component such as the engine or transaxle/transmission, be careful not to lose your balance and drop them. Also, do not allow them to strike adjacent parts, especially the brake tubes and master cylinder.

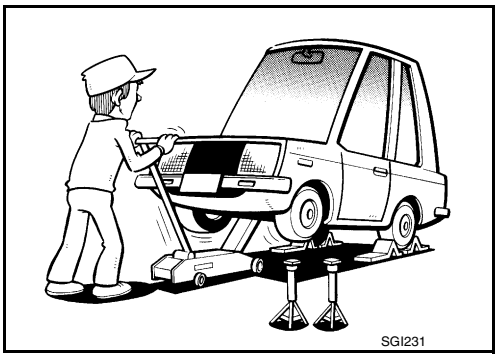

- Before starting repairs which do not require battery power:
  Turn off ignition switch.
  Disconnect the negative battery terminal.
- If the battery terminals are disconnected, recorded memory of radio and each control unit is erased.

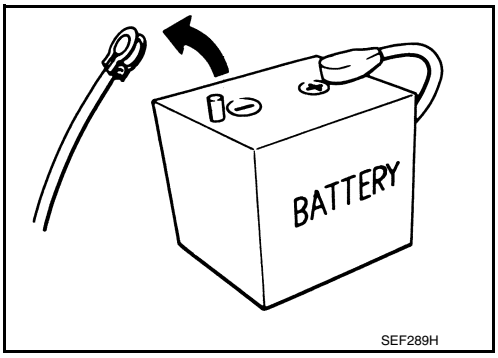

- To prevent serious burns:
  Avoid contact with hot metal parts.
  Do not remove the radiator cap when the engine is hot.
- Dispose of drained oil or the solvent used for cleaning parts in an appropriate manner.
- Do not attempt to top off the fuel tank after the fuel pump nozzle shuts off automatically.
  Continued refueling may cause fuel overflow, resulting in fuel spray and possibly a fire.
- Clean all disassembled parts in the designated liquid or solvent prior to inspection or assembly.
- Replace oil seals, gaskets, packings, O-rings, locking washers, cotter pins, self-locking nuts, etc. with new ones.

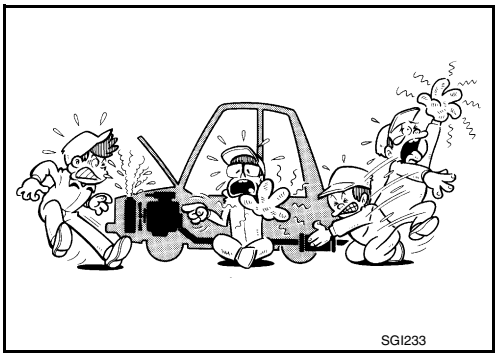

- Replace inner and outer races of tapered roller bearings and needle bearings as a set.
- Arrange the disassembled parts in accordance with their assembled locations and sequence.
- Do not touch the terminals of electrical components which use microcomputers (such as ECM).
  Static electricity may damage internal electronic components.
- After disconnecting vacuum or air hoses, attach a tag to indicate the proper connection.
- Use only the fluids and lubricants specified in this manual.
- Use approved bonding agent, sealants or their equivalents when required.

- Use hand tools, power tools (disassembly only) and recommended special tools where specified for safe and efficient service repairs.
- When repairing the fuel, oil, water, vacuum or exhaust systems, check all affected lines for leaks.

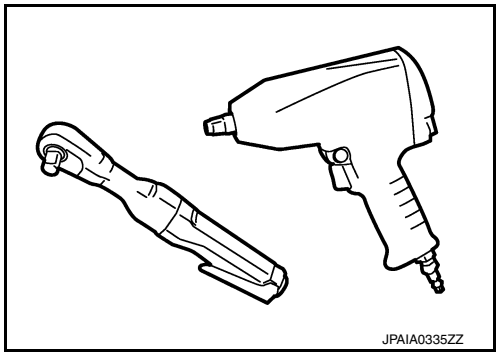

- Before servicing the vehicle:
  Protect fenders, upholstery and carpeting with appropriate covers.
  Take caution that keys, buckles or buttons do not scratch paint.

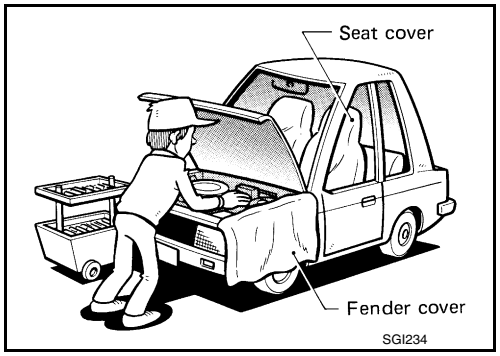

WARNING:
To prevent ECM from storing the diagnostic trouble codes, do not carelessly disconnect the harness connectors which are related to the engine control system and TCM (transmission control module) system. The connectors should be disconnected only when working according to the WORK FLOW of TROUBLE DIAGNOSES in EC and TM sections.

Three Way Catalyst

INFOID:0000000009472964

If a large amount of unburned fuel flows into the catalyst, the catalyst temperature will be excessively high. To prevent this, follow the instructions.
- Use unleaded gasoline only. Leaded gasoline will seriously damage the three way catalyst.
- When checking for ignition spark or measuring engine compression, make tests quickly and only when necessary.
- Do not run engine when the fuel tank level is low, otherwise the engine may misfire, causing damage to the catalyst.

Do not place the vehicle on flammable material. Keep flammable material off the exhaust pipe and the three way catalyst.

Fuel (Regular Unleaded Gasoline Recommended) HR16DE

INFOID:0000000009472965

Use unleaded regular gasoline with an octane rating of at least 87 AKI (Anti-Knock Index) number (Research octane number 91). E-85 fuel (85% fuel ethanol, 15% unleaded gasoline) may only be used in vehicles specifically designed for E-85 fuel (i.e. Flexible Fuel Vehicle - FFV models).

CAUTION:
Do not use leaded gasoline. Using leaded gasoline will damage the three way catalyst. Do not use E-85 fuel (85% fuel ethanol, 15% unleaded gasoline) unless the vehicle is specifically designed for E-85 fuel (i.e. Flexible Fuel Vehicle - FFV models). Using a fuel other than that specified could adversely affect the emission control devices and systems, and could also affect the warranty coverage validity.

Multiport Fuel Injection System or Engine Control System

INFOID:0000000009472966

- Before connecting or disconnecting any harness connector for the multiport fuel injection system or ECM:
  Turn ignition switch to “OFF” position.
  Disconnect negative battery terminal.
  Otherwise, there may be damage to ECM.
- Before disconnecting pressurized fuel line from fuel pump to injectors, be sure to release fuel pressure.
- Be careful not to jar components such as ECM and mass air flow sensor.

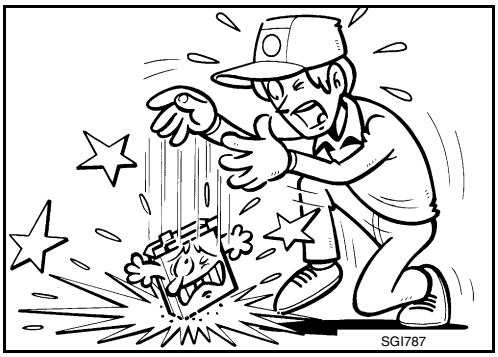

Hoses

INFOID:0000000009472967

HOSE REMOVAL AND INSTALLATION

- To prevent damage to rubber hose, do not pry off rubber hose with tapered tool or screwdriver.

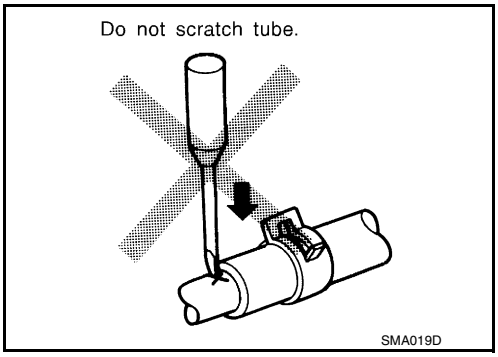

- To reinstall the rubber hose securely, make sure that hose insertion length and orientation is correct. (If tube is equipped with hose stopper, insert rubber hose into tube until it butts up against hose stopper.)

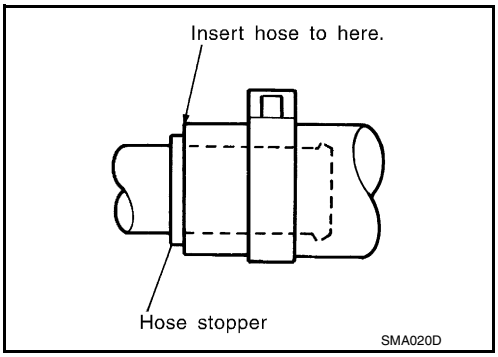

HOSE CLAMPING

- If old rubber hose is re-used, install hose clamp in its original position (at the indentation where the old clamp was). If there is a trace of tube bulging left on the old rubber hose, align rubber hose at that position.
- Discard old clamps; replace with new ones.

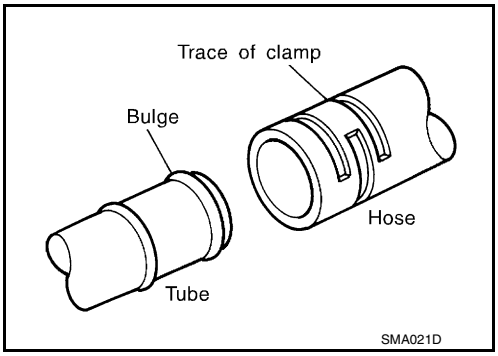

- After installing plate clamps, apply force to them in the direction of the arrow, tightening rubber hose equally all around.

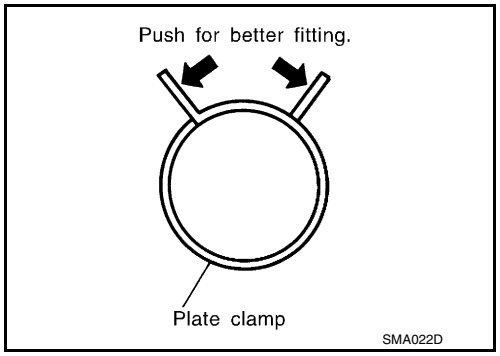

Engine Oils

INFOID:0000000009472968

Prolonged and repeated contact with used engine oil may cause skin cancer. Try to avoid direct skin contact with used oil.
If skin contact is made, wash thoroughly with soap or hand cleaner as soon as possible.

HEALTH PROTECTION PRECAUTIONS

- Avoid prolonged and repeated contact with oils, particularly used engine oils.
- Wear protective clothing, including impervious gloves where practicable.
- Do not put oily rags in pockets.
- Avoid contaminating clothes, particularly underpants, with oil.
- Heavily soiled clothing and oil-impregnated footwear should not be worn. Overalls must be cleaned regularly.
- First aid treatment should be obtained immediately for open cuts and wounds.
- Use barrier creams, applying them before each work period, to help the removal of oil from the skin.
- Wash with soap and water to ensure all oil is removed (skin cleansers and nail brushes will help). Preparations containing lanolin replace the natural skin oils which have been removed.
- Do not use gasoline, kerosene, diesel fuel, gas oil, thinners or solvents for cleaning skin.
- If skin disorders develop, obtain medical advice without delay.
- Where practical, degrease components prior to handling.
- Where there is a risk of eye contact, eye protection should be worn, for example, chemical goggles or face shields; in addition an eye wash facility should be provided.

ENVIRONMENTAL PROTECTION PRECAUTIONS

Dispose of used oil and used oil filters through authorized waste disposal contractors to licensed waste disposal sites, or to the waste oil reclamation trade. If in doubt, contact the local authority for advice on disposal facilities.
It is illegal to pour used oil on to the ground, down sewers or drains, or into water sources.
The regulations concerning pollution vary between regions.

Air Conditioning

INFOID:0000000009472969

Use an approved refrigerant recovery unit any time the air conditioning system must be discharged. Refer to HA-17, "Description".

LIFTING POINT

Special Service Tool

INFOID:0000000009472970

The actual shapes of Kent-Moore tools may differ from those of special service tools illustrated here.

Tool number (Kent-Moore No.) Tool name	Description
LM4086-0200 (-) Board on attachment	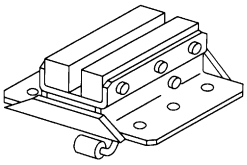 S-NT001
LM4519-0000 (-) Safety stand attachment	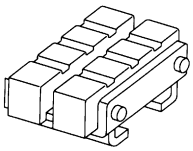 S-NT002

CAUTION:

- **Every time the vehicle is lifted up, maintain the complete vehicle curb condition.**
- **Since the vehicle's center of gravity changes when removing main parts on the front side (engine, transmission, suspension etc.), support a jack up point on the rear side garage jack with a transmission jack or equivalent.**
- **Since the vehicle's center of gravity changes when removing main parts on the rear side (rear axle, suspension, etc.), support a jack up point on the front side garage jack with a transmission jack or equivalent.**
- **Be careful not to smash or do anything that would affect piping parts.**

Garage Jack and Safety Stand

INFOID:0000000009472971

WARNING:

- **Park the vehicle on a level surface when using the jack. Make sure to avoid damaging pipes, tubes, etc. under the vehicle.**
- **Never get under the vehicle while it is supported only by the jack. Always use safety stands when you have to get under the vehicle.**
- **Place wheel chocks at both front and back of the wheels on the ground.**

- **Lift at reinforced area of front suspension member where lower control arm attaches, staying in center line of wheels.**

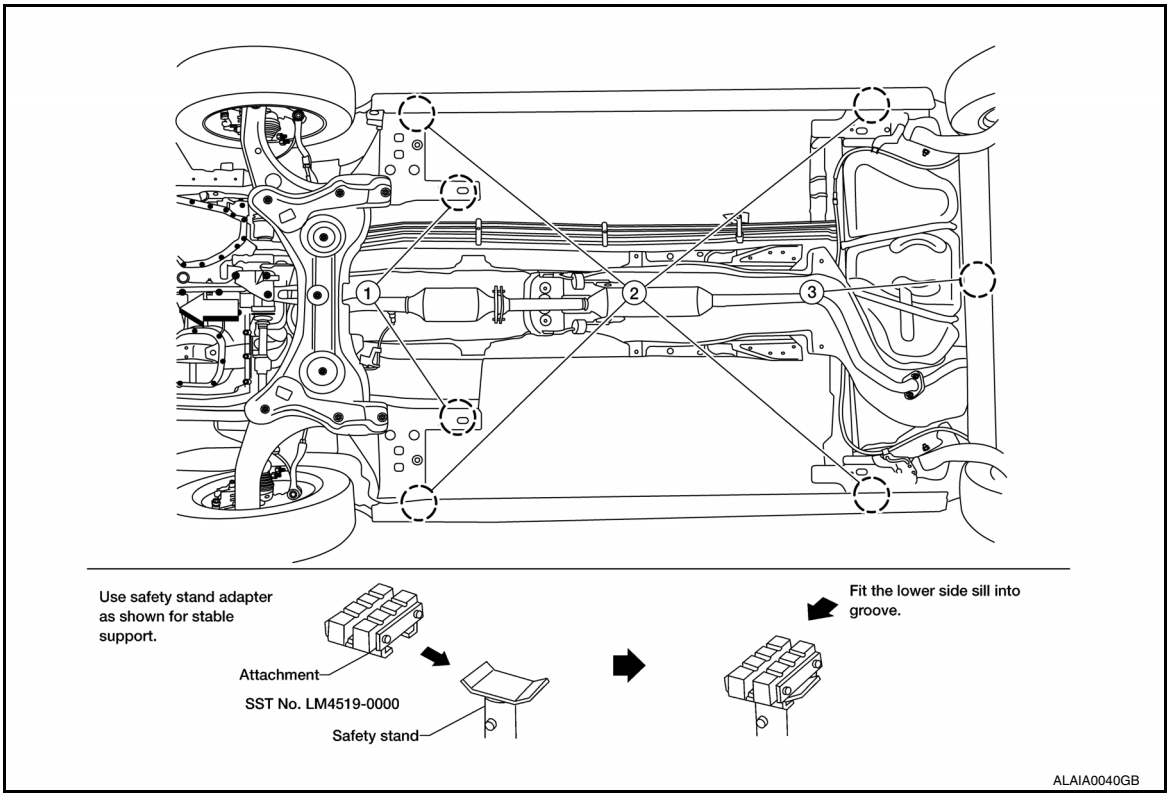

⇦ Vehicle front

1. Front garage jack points
2. Safety stand points
3. Rear garage jack point

2-Pole Lift

INFOID:0000000009472972

WARNING:
When lifting the vehicle, open the lift arms as wide as possible and ensure that the front and rear of the vehicle are well balanced.

When setting the lift arm, do not allow the arm to contact the brake tubes, brake cable, fuel lines and sill spoiler.

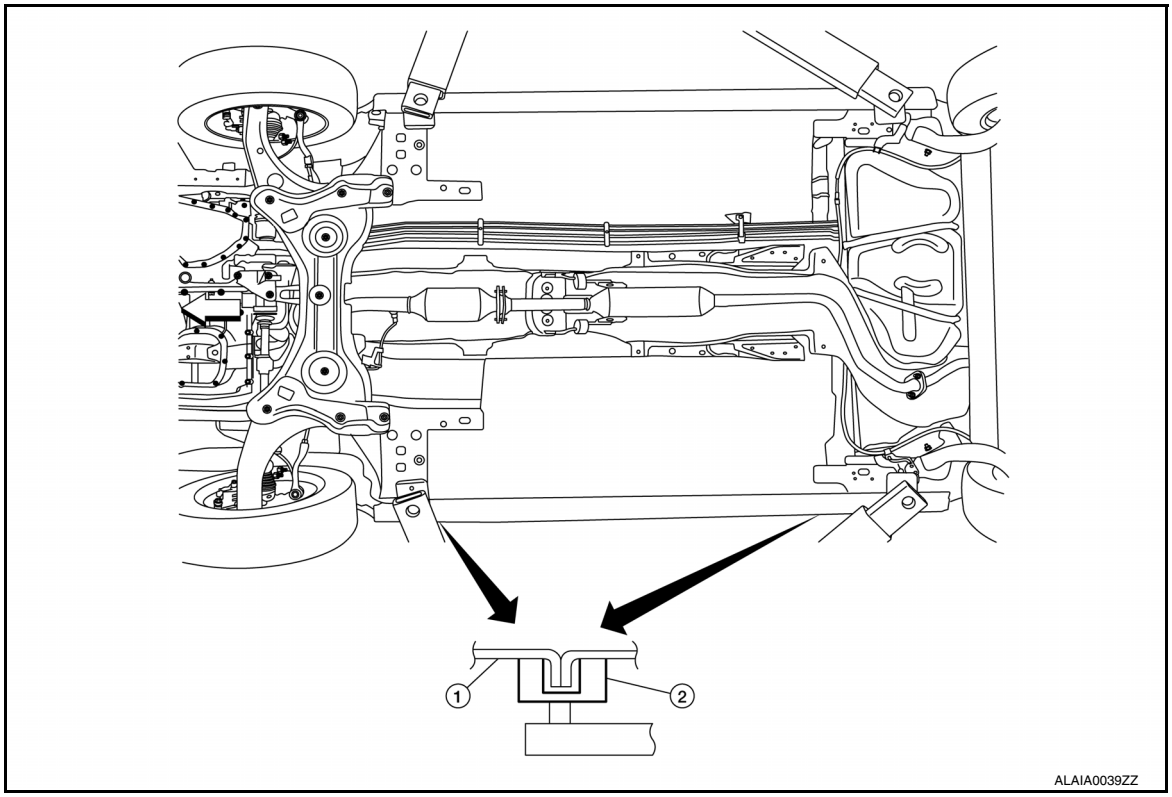

⇦ Vehicle front

1. Sill
2. Lift pad

Board-on Lift

INFOID:0000000009472973

CAUTION:

Make sure vehicle is empty when lifting.

- **The board-on lift attachment (LM4086-0200) set at front end of vehicle should be set on the front of the sill under the front door opening.**
- **Position attachments at front and rear ends of board-on lift.**

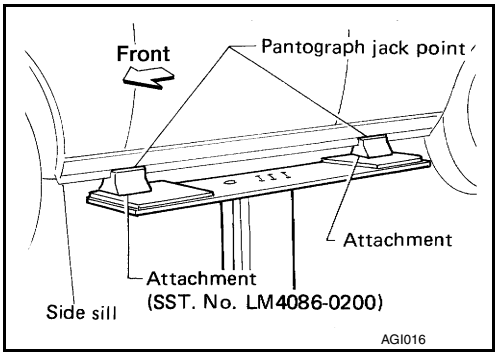

TOW TRUCK TOWING

Tow Truck Towing

INFOID:0000000009472974

CAUTION:
- **Never tow a CVT model with the rear wheels raised and the front wheels on the ground. This may cause serious and expensive damage to the transaxle. If it is necessary to tow the vehicle with the rear wheels raised, always use towing dollies under the front wheels.**
- **Never tow a CVT model from the rear (that is backward) with four wheels on the ground. This may cause serious and expensive damage to the transaxle.**

NISSAN recommends that the vehicle be towed with the driving (front) wheels off the ground.

CAUTION:
- **Always release the parking brake when towing the vehicle with the front wheels raised with the rear wheels on the ground.**
- **When towing manual transaxle models with the front wheels on the ground (if a towing dolly is not used), turn the ignition key to the OFF position, and secure the steering wheel in the straight-ahead position with a rope or similar device.**
  Move the shift lever to the N (Neutral) position.

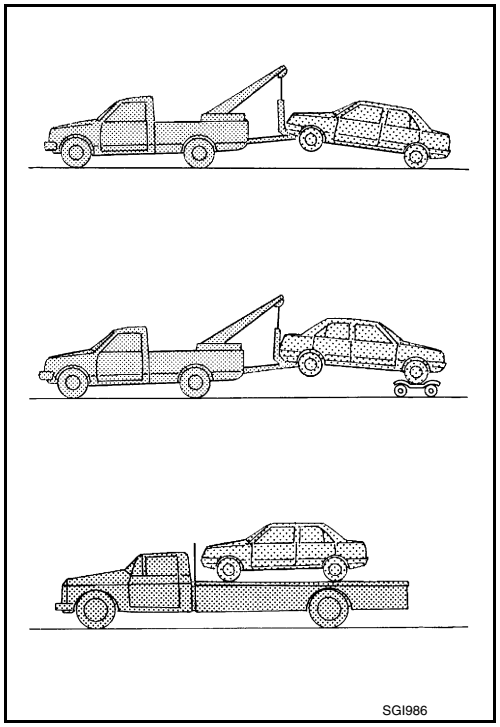

Vehicle Recovery (Freeing a Stuck Vehicle)

INFOID:0000000009472975

FRONT

WARNING:
- **Stand clear of a stuck vehicle.**
- **Do not spin your tires at high speed. This could cause them to explode and result in serious injury. Parts of your vehicle could also overheat and be damaged.**

CAUTION:
- **Tow chains or cables must be attached only to the vehicle recovery hooks or main structural members of the vehicle. Otherwise, the vehicle body will be damaged.**
- **Do not use the vehicle tie downs to free a vehicle stuck in sand, snow, mud, etc. Never tow the vehicle using the vehicle tie downs or recovery hooks.**
- **Always pull the cable straight out from the front of the vehicle. Never pull on the hook at an angle.**
- **Pulling devices should be routed so they do not touch any part of the suspension, steering, brake or cooling systems.**
- **Pulling devices such as ropes or canvas straps are not recommended for use in vehicle towing or recovery.**

CVT

To tow a vehicle equipped with a CVT, an appropriate vehicle dolly **MUST** be placed under the towed vehicle's drive wheels. **Always** follow the dolly manufacture's recommendations when using their product.
If the vehicle is stuck in sand, snow, mud, etc., use the following procedure:

1. Make sure the area in front and behind the vehicle is clear of obstructions.
2. Turn the steering wheel right and left to clear an area around the front tires.

3. Slowly rock the vehicle forward and backward.
   Shift back and forth between R (reverse) and D (drive).
   Apply the accelerator as little as possible to maintain the rocking motion.
   Release the accelerator pedal before shifting between R and D.
   Do not spin the tires above 35 m.p.h. (55 km/h).
4. If the vehicle can not be freed after a few tries, contact a professional towing service to remove the vehicle.

VEHICLE INFORMATION

IDENTIFICATION INFORMATION

Model Variation

INFOID:0000000009472976

Model Codes

Body	Engine	Grade	Transmission	Destination	
				US	Canada
Hatchback	HR16DE	S	5 M/T	TDTALCF-EUA	TDTALCF-ENA
			CVT	TDTALCZ-EUA	TDTALCZ-ENA
		SV	5 M/T	—	TDTALDF-ENA
			CVT	TDTALDZ-EUA	TDTALDZ-ENA
		SL	5 M/T	—	TDTALEF-ENA
			CVT	TDTALEZ-EUA	TDTALEZ-ENA

Prefix and Suffix Designations

Position	Character	Qualifier	Definition
1	T	Body type	T: Hatchback
2	DT	Engine	DT: HR16DE
3			
4	A	Axle	A: 2WD
5	L	Drive	L: LH
6	C	Grade	C: S
			D: SV
			E: SL
7	F	Transmission	F: 5 M/T
			Z: CVT
8	E12	Model	E12: Versa Note
9			
10			
11	E	Intake	E: EGI
12	U	Zone	U: 50-state
			N: Canada
13	A	Equipment	A: Standard
14	XXXXX	Option Codes	Option Codes
15			
16			
17			
18			

Identification Number

INFOID:0000000009472977

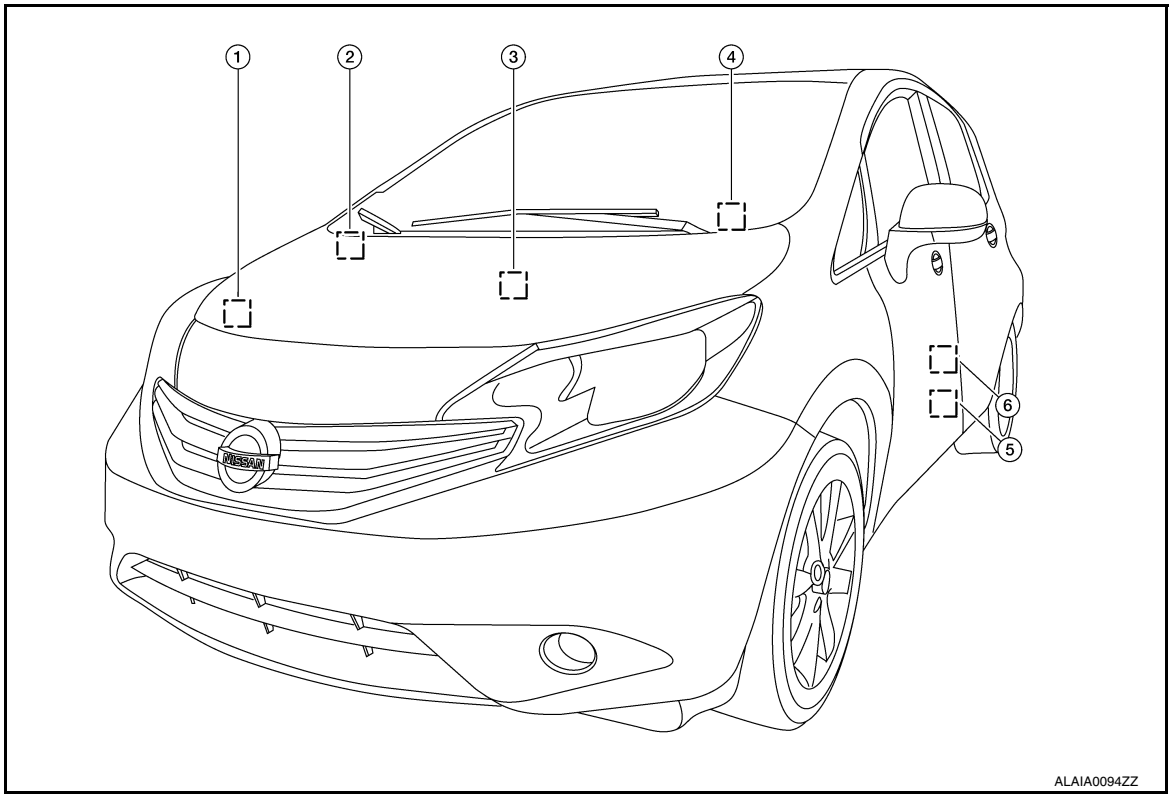

1. Air conditioner specification label
2. Vehicle identification number chassis number (right side of bulkhead)
3. Emission control information label
4. Vehicle Identification Number (VIN) plate
5. F.M.V.S.S./C.M.V.S.S. certification label
6. Tire and loading information label

Vehicle Identification Number Arrangement

Position	Character	Qualifier	Definition
1	3N1	Manufacturer	3N1: NISSAN Passenger Car [Nismex]
2			
3			
4	C	Engine type	C: HR16DE
5	E2	Model series	E2: NISSAN Versa Note Model E12
6			
7	C	Body type	C: 4 door hatchback
8	P	Restraint system	P: (5 seating capacity) • (Driver and Passenger) 3-Point Manual Belts, Frontal Air Bags, Side Air Bags and Curtain Side Air Bags. • (2nd Row Outboard): 3-Point Manual Belts and Curtain Side Air Bags. • (2nd Row Center): 3-Point Manual Belt.
9	*	Check digit	(0 to 9 or X) The code for the check digit is determined by a mathematical computation
10	E	Model year	E: 2014
11	L	Manufacturing plant	L: Aguascalientes, Mexico
			K: Civac, Mexico

Position	Character	Qualifier	Definition
12	XXXXXX	Vehicle serial number	Chassis number
13			
14			
15			
16			
17			

Identification Plate

INFOID:0000000009472992

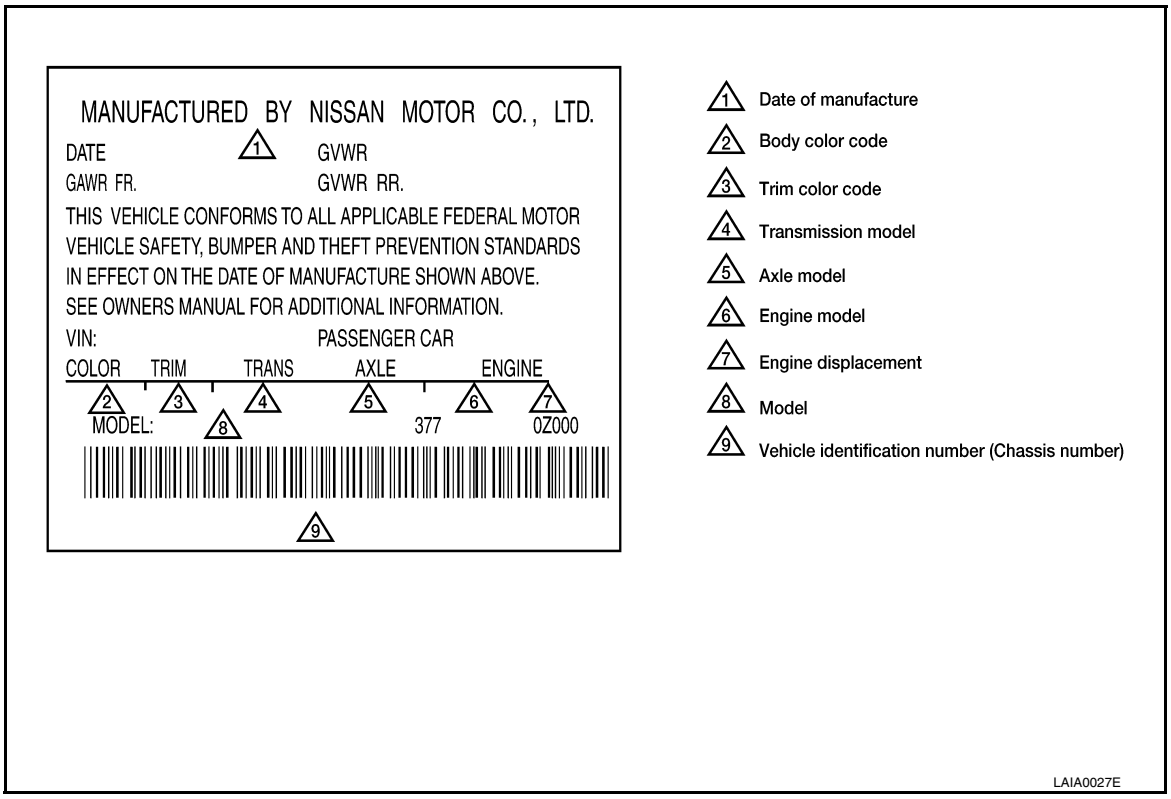

Engine Serial Number

INFOID:0000000009472978

HR16DE

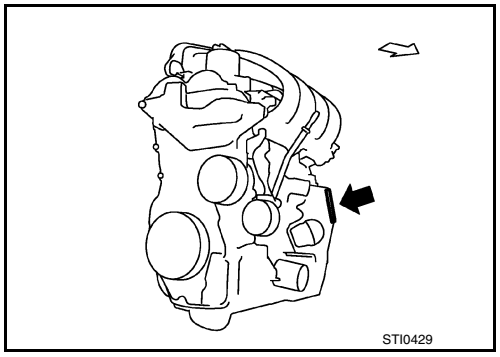

⇦: Vehicle front

CVT Number

INFOID:0000000009472979

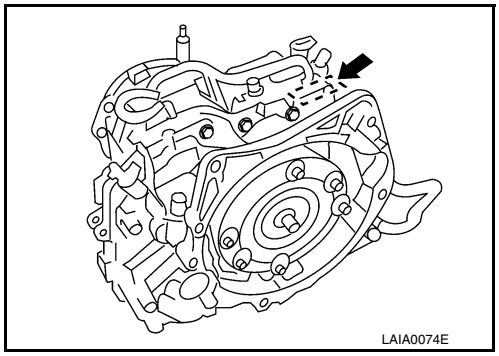

Manual Transaxle Number

INFOID:0000000009472980

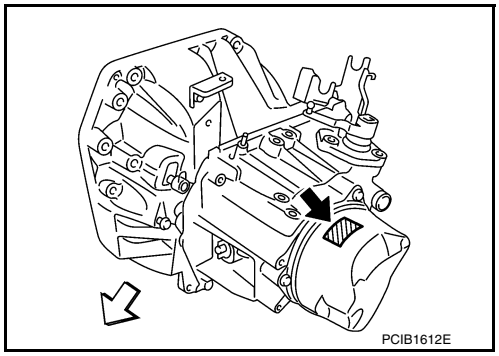

⇦: Vehicle front

Dimensions

INFOID:0000000009472981

Unit:mm (in)

Overall length	4,141 (163)
Overall width	1,698 (66.9)
Overall height	1,537 (60.5)
Front tread	15 inch wheel: 1,480 (58.3) 16 inch wheel: 1,470 (57.9)
Rear tread	15 inch wheel: 1,485 (58.5) 16 inch wheel: 1,475 (58.1)
Wheelbase	2,600 (102.4)

Wheels & Tires

INFOID:0000000009472982

	Conventional	Spare
Road wheel/offset mm (in)	15 X 5.5J Aluminum/40 (1.57) 16 X 6.0J Aluminum/45 (1.77)	T125/70D15
Tire size	P185/65R15 P195/55R16	

BASIC INSPECTION

SERVICE INFORMATION FOR ELECTRICAL INCIDENT

Work Flow

INFOID:0000000009472983

WORK FLOW

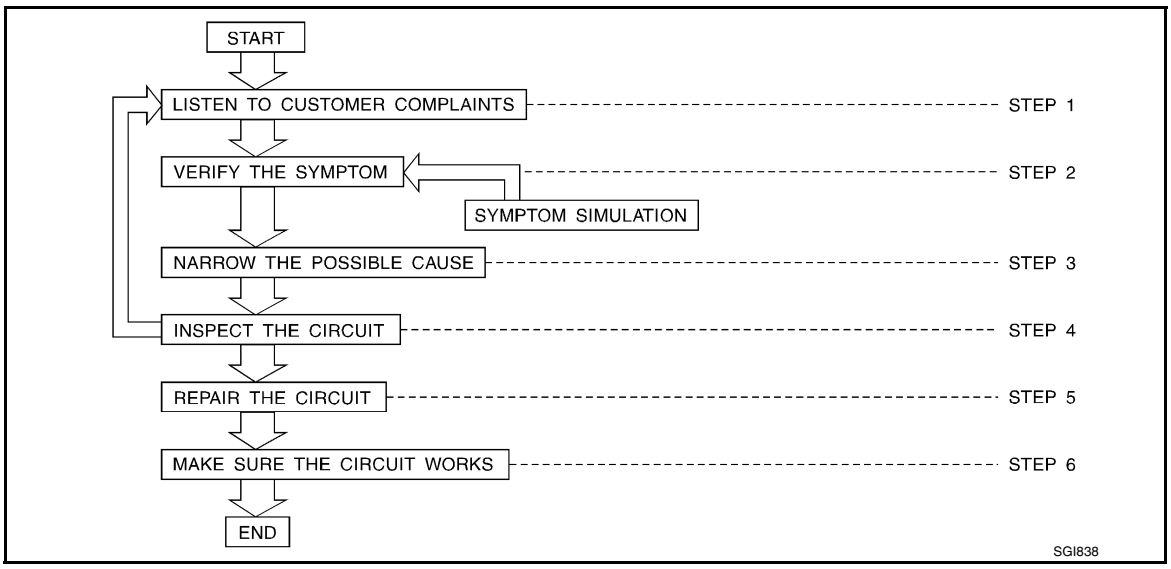

STEP	DESCRIPTION	
STEP 1	Get detailed information about the conditions and the environment when the incident occurred. The following are key pieces of information required to make a good analysis:	
	WHAT	Vehicle Model, Engine, Transmission/Transaxle and the System (i.e. Radio).
	WHEN	Date, Time of Day, Weather Conditions, Frequency.
	WHERE	Road Conditions, Altitude and Traffic Situation.
	HOW	System Symptoms, Operating Conditions (Other Components Interaction). Service History and if any After Market Accessories have been installed.
STEP 2	Operate the system, road test if necessary. Verify the parameter of the incident. If the problem cannot be duplicated, refer to “Incident Simulation Tests”.	
STEP 3	Get the proper diagnosis materials together including: • Power Supply Routing • System Operation Descriptions • Applicable Service Manual Sections • Check for any Service Bulletins Identify where to begin diagnosis based upon your knowledge of the system operation and the customer comments.	
STEP 4	Inspect the system for mechanical binding, loose connectors or wiring damage. Determine which circuits and components are involved and diagnose using the Power Supply Routing and Harness Layouts.	
STEP 5	Repair or replace the incident circuit or component.	
STEP 6	Operate the system in all modes. Verify the system works properly under all conditions. Make sure you have not inadvertently created a new incident during your diagnosis or repair steps.	

Control Units and Electrical Parts

INFOID:0000000009472984

PRECAUTIONS

- Never reverse polarity of battery terminals.
- Install only parts specified for a vehicle.
- Before replacing the control unit, check the input and output and functions of the component parts.
- Do not apply excessive force when disconnecting a connector.

- Do not apply excessive shock to the control unit by dropping or hitting it.
- Be careful to prevent condensation in the control unit due to rapid temperature changes and do not let water or rain get on it. If water is found in the control unit, dry it fully and then install it in the vehicle.
- Be careful not to let oil to get on the control unit connector.
- Avoid cleaning the control unit with volatile oil.
- Do not disassemble the control unit, and do not remove the upper and lower covers.

- When using a DMM, be careful not to let test probes get close to each other to prevent the power transistor in the control unit from damaging battery voltage because of short circuiting.
- When checking input and output signals of the control unit, use the specified check adapter.

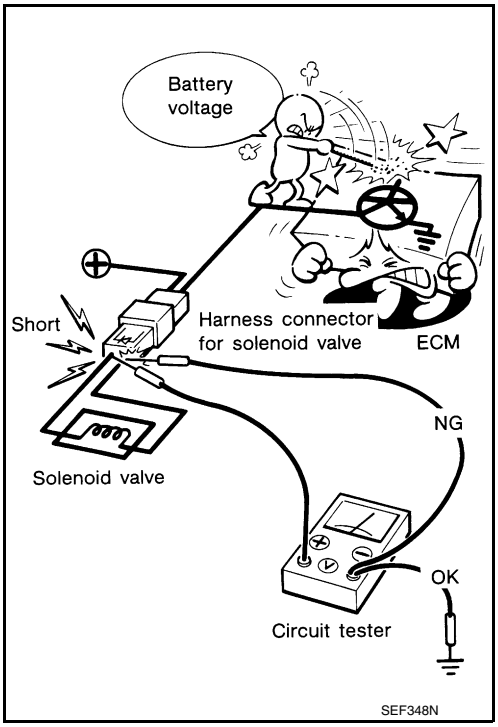

How to Check Terminal

INFOID:0000000009472985

CONNECTOR AND TERMINAL PIN KIT

- Use the connector and terminal pin kits listed below when replacing connectors or terminals.
- The connector and terminal pin kits contain some of the most commonly used NISSAN/INFINITI connectors and terminals. For detailed connector and terminal pin replacement procedures, refer to the latest NISSAN/INFINITI CONNECTOR AND TERMINAL PIN SERVICE MANUAL.

Tool number (Kent-Moore No.) Tool name	Description
- (J38751-95NI) Connector and terminal pin kit (NISSAN) - (J38751-95INF) Connector and terminal pin kit (INFINITI) - (J42992-98KIT) OBD and terminal repair kit - (J42992-2000UPD) OBD-II Connector Kit Update	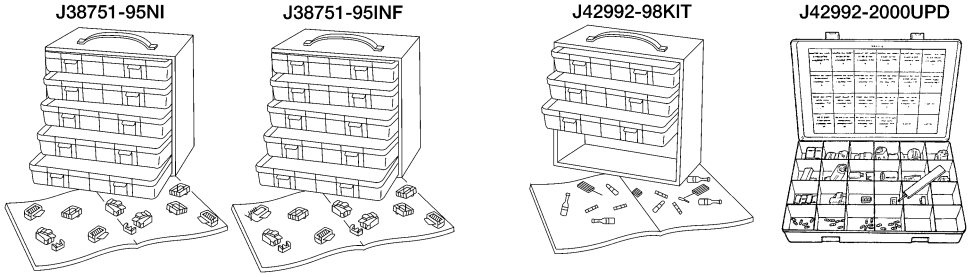

HOW TO PROBE CONNECTORS

- Connector damage and an intermittent connection can result from improperly probing of the connector during circuit checks.
- The probe of a digital multimeter (DMM) may not correctly fit the connector cavity. To correctly probe the connector, follow the procedures below using a “T” pin. For the best contact grasp the “T” pin using an alligator clip.

Probing from Harness Side

Standard type (not waterproof type) connector should be probed from harness side with “T” pin.

- If the connector has a rear cover such as a ECM connector, remove the rear cover before probing the terminal.
- Do not probe waterproof connector from harness side. Damage to the seal between wire and connector may result.

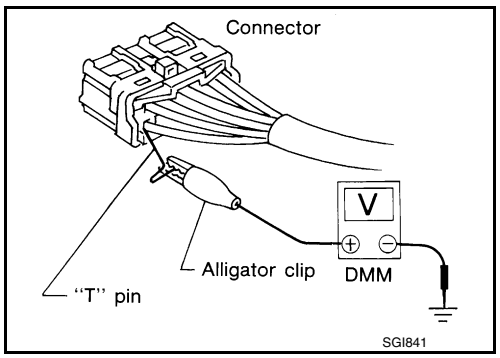

Probing from Terminal Side

FEMALE TERMINAL

- There is a small notch above each female terminal. Probe each terminal with the “T” pin through the notch.
  Do not insert any object other than the same type male terminal into female terminal.

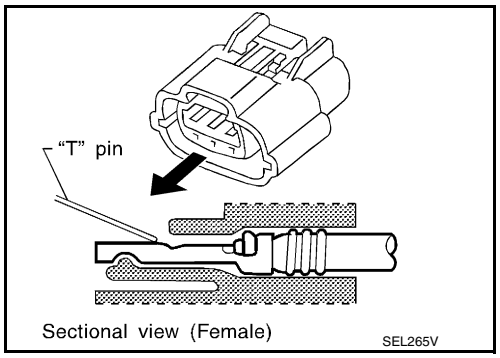

- Some connectors do not have a notch above each terminal. To probe each terminal, remove the connector retainer to make contact space for probing.

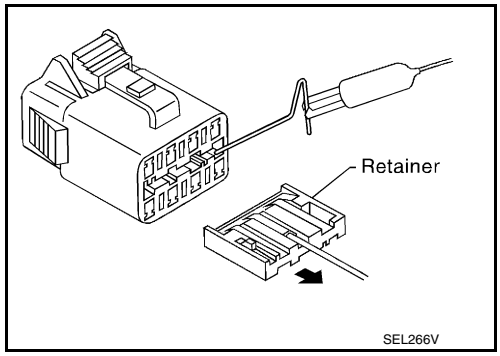

MALE TERMINAL

- Carefully probe the contact surface of each terminal using a “T” pin.
  CAUTION:
  Dot not bend terminal.

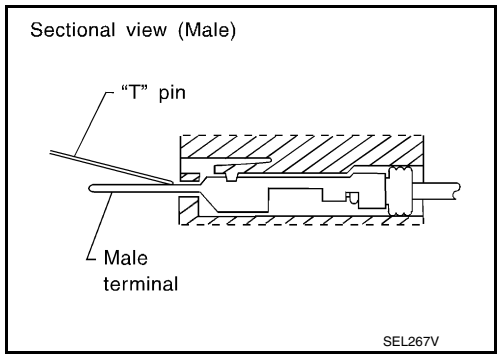

How to Check Enlarged Contact Spring of Terminal

- An enlarged contact spring of a terminal may create intermittent signals in the circuit.
- If the intermittent open circuit occurs, follow the procedure below to inspect for open wires and enlarged contact spring of female terminal.

1. Assemble a male terminal and approx. 10 cm (3.9 in) of wire.
   NOTE:
   Use a male terminal which matches the female terminal.
2. Disconnect the suspected faulty connector and hold it terminal side up.

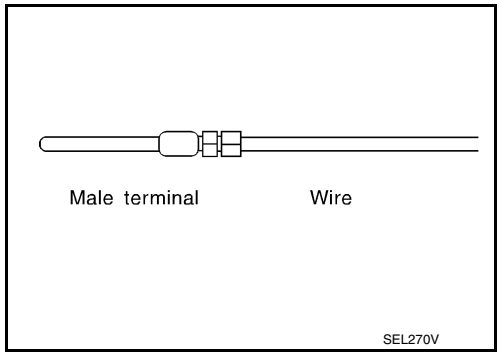

3. While holding the wire of the male terminal, try to insert the male terminal into the female terminal.
   CAUTION:
   Do not force the male terminal into the female terminal with your hands.

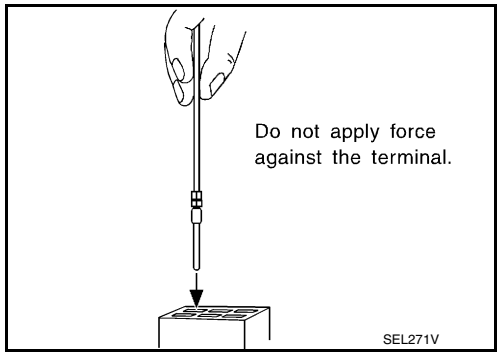

4. While moving the connector, check whether the male terminal can be easily inserted or not.

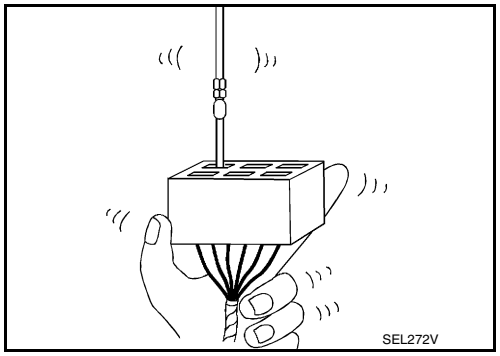

- If the male terminal can be easily inserted into the female terminal, replace the female terminal.

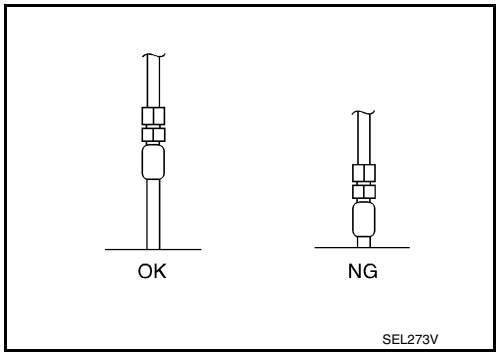

Waterproof Connector Inspection

If water enters the connector, it can short interior circuits. This may lead to intermittent problems. Check the following items to maintain the original waterproof characteristics.

RUBBER SEAL INSPECTION

- Most waterproof connectors are provided with a rubber seal between the male and female connectors. If the seal is missing, the waterproof performance may not meet specifications.
- The rubber seal may come off when connectors are disconnected. Whenever connectors are reconnected, make sure the rubber seal is properly installed on either side of male or female connector.

WIRE SEAL INSPECTION

- The wire seal must be installed on the wire insertion area of a waterproof connector. Be sure that the seal is installed properly.

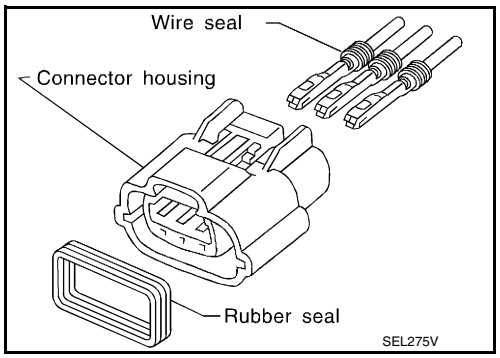

Terminal Lock Inspection

Check for unlocked terminals by pulling wire at the end of connector. An unlocked terminal may create intermittent signals in the circuit.

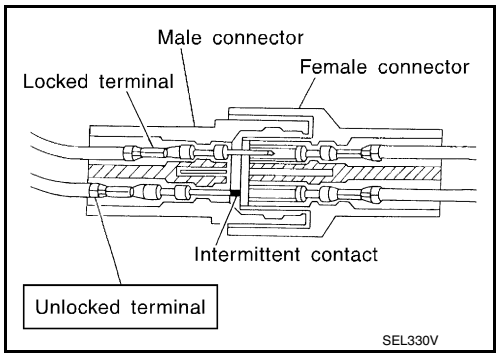

Intermittent Incident

INFOID:0000000009472986

DESCRIPTION

Sometimes the symptom is not present when the vehicle is brought in for service. If possible, re-create the conditions present at the time of the incident. Doing so may help avoid a No Trouble Found Diagnosis. The fol-

lowing section illustrates ways to simulate the conditions/environment under which the owner experiences an electrical incident.

The section is broken into the six following topics:
- Vehicle vibration
- Heat sensitive
- Freezing
- Water intrusion
- Electrical load
- Cold or hot start up

Get a thorough description of the incident from the customer. It is important for simulating the conditions of the problem.

VEHICLE VIBRATION

The problem may occur or become worse while driving on a rough road or when engine is vibrating (idle with A/C on). In such a case, you will want to check for a vibration related condition. Refer to the following illustration.

Connector & Harness

Determine which connectors and wiring harness would affect the electrical system you are inspecting. Gently shake each connector and harness while monitoring the system for the incident you are trying to duplicate. This test may indicate a loose or poor electrical connection.

Hint

Connectors can be exposed to moisture. It is possible to get a thin film of corrosion on the connector terminals. A visual inspection may not reveal this without disconnecting the connector. If the problem occurs intermittently, perhaps the problem is caused by corrosion. It is a good idea to disconnect, inspect and clean the terminals on related connectors in the system.

Sensor & Relay

Gently apply a slight vibration to sensors and relays in the system you are inspecting.
This test may indicate a loose or poorly mounted sensor or relay.

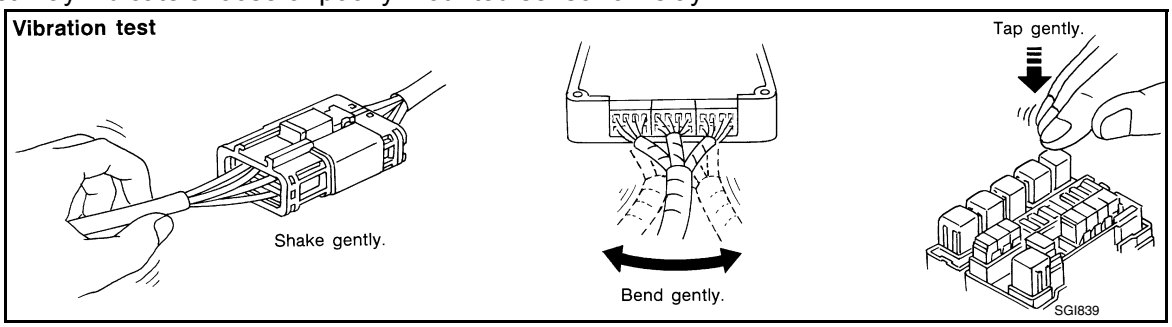

Engine Compartment

There are several reasons a vehicle or engine vibration could cause an electrical complaint. Some of the things to check for are:
- Connectors not fully seated.
- Wiring harness not long enough and is being stressed due to engine vibrations or rocking.
- Wires laying across brackets or moving components.
- Loose, dirty or corroded ground wires.
- Wires routed too close to hot components.

To inspect components under the hood, start by verifying the integrity of ground connections. (Refer to Ground Inspection described later.) First check that the system is properly grounded. Then check for loose connection by gently shaking the wiring or components as previously explained. Using the wiring diagrams inspect the wiring for continuity.

Behind the Instrument Panel

An improperly routed or improperly clamped harness can become pinched during accessory installation. Vehicle vibration can aggravate a harness which is routed along a bracket or near a screw.

Under Seating Areas

An unclamped or loose harness can cause wiring to be pinched by seat components (such as slide guides) during vehicle vibration. If the wiring runs under seating areas, inspect wire routing for possible damage or pinching.

HEAT SENSITIVE

- The customer's concern may occur during hot weather or after car has sat for a short time. In such cases you will want to check for a heat sensitive condition.
- To determine if an electrical component is heat sensitive, heat the component with a heat gun or equivalent.
  CAUTION:
  Do not heat components above 60°C (140°F).
- If incident occurs while heating the unit, either replace or properly insulate the component.

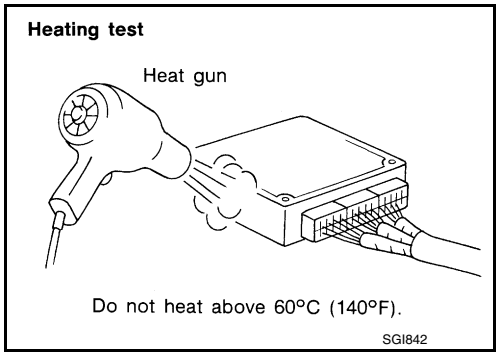

FREEZING

- The customer may indicate the incident goes away after the car warms up (winter time). The cause could be related to water freezing somewhere in the wiring/electrical system.
- There are two methods to check for this. The first is to arrange for the owner to leave his car overnight. Make sure it will get cold enough to demonstrate his complaint. Leave the car parked outside overnight. In the morning, do a quick and thorough diagnosis of those electrical components which could be affected.
- The second method is to put the suspect component into a freezer long enough for any water to freeze. Reinstall the part into the car and check for the reoccurrence of the incident. If it occurs, repair or replace the component.

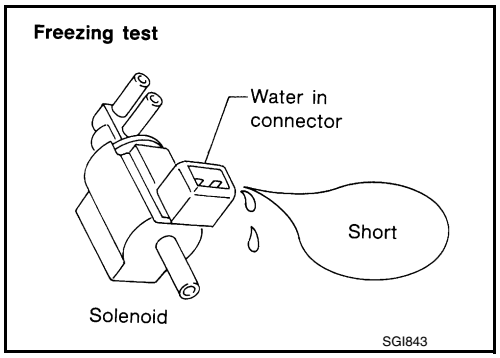

WATER INTRUSION

The incident may occur only during high humidity or in rainy/snowy weather. In such cases the incident could be caused by water intrusion on an electrical part. This can be simulated by soaking the car or running it through a car wash.

CAUTION:
Do not spray water directly on any electrical components.

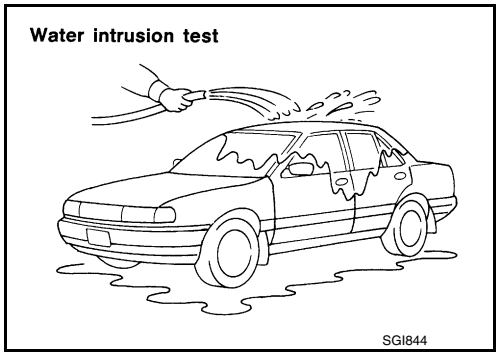

ELECTRICAL LOAD

The incident may be electrical load sensitive. Perform diagnosis with all accessories (including A/C, rear window defogger, radio, fog lamps) turned on.

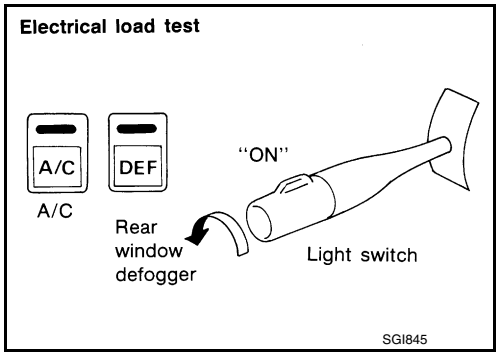

COLD OR HOT START UP

On some occasions an electrical incident may occur only when the car is started cold, or it may occur when the car is restarted hot shortly after being turned off. In these cases you may have to keep the car overnight to make a proper diagnosis.

Circuit Inspection

INFOID:0000000009472987

DESCRIPTION

- In general, testing electrical circuits is an easy task if it is approached in a logical and organized method. Before beginning it is important to have all available information on the system to be tested. Also, get a thorough understanding of system operation. Then you will be able to use the appropriate equipment and follow the correct test procedure.
- You may have to simulate vehicle vibrations while testing electrical components. Gently shake the wiring harness or electrical component to do this.

OPEN	A circuit is open when there is no continuity through a section of the circuit.	
SHORT	There are two types of shorts.	
	• SHORT CIRCUIT	When a circuit contacts another circuit and causes the normal resistance to change.
	• SHORT TO GROUND	When a circuit contacts a ground source and grounds the circuit.

NOTE:
Refer to GI-38, "How to Check Terminal" to probe or check terminal.

TESTING FOR “OPENS” IN THE CIRCUIT

Before you begin to diagnose and test the system, you should rough sketch a schematic of the system. This will help you to logically walk through the diagnosis process. Drawing the sketch will also reinforce your working knowledge of the system.

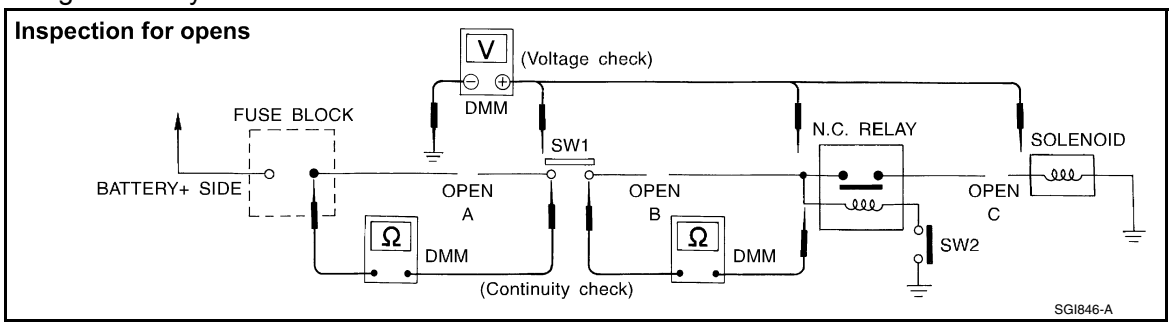

Continuity Check Method

The continuity check is used to find an open in the circuit. The digital multimeter (DMM) set on the resistance function will indicate an open circuit as over limit (no beep tone or no ohms symbol). Make sure to always start with the DMM at the highest resistance level.

To help in understanding the diagnosis of open circuits, please refer to the previous schematic.

- Disconnect the battery negative cable.
- Start at one end of the circuit and work your way to the other end. (At the fuse block in this example)
- Connect one probe of the DMM to the fuse block terminal on the load side.
- Connect the other probe to the fuse block (power) side of SW1. Little or no resistance will indicate that portion of the circuit has good continuity. If there were an open in the circuit, the DMM would indicate an over limit or infinite resistance condition. (point A)
- Connect the probes between SW1 and the relay. Little or no resistance will indicate that portion of the circuit has good continuity. If there were an open in the circuit, the DMM would indicate an over limit or infinite resistance condition. (point B)
- Connect the probes between the relay and the solenoid. Little or no resistance will indicate that portion of the circuit has good continuity. If there were an open in the circuit, the DMM would indicate an over limit or infinite resistance condition. (point C)

Any circuit can be diagnosed using the approach in the previous example.

Voltage Check Method

To help in understanding the diagnosis of open circuits please refer to the previous schematic.

In any powered circuit, an open can be found by methodically checking the system for the presence of voltage. This is done by switching the DMM to the voltage function.

- Connect one probe of the DMM to a known good ground.
- Begin probing at one end of the circuit and work your way to the other end.
- With SW1 open, probe at SW1 to check for voltage.
  voltage; open is further down the circuit than SW1.

no voltage; open is between fuse block and SW1 (point A).
- Close SW1 and probe at relay.
  voltage; open is further down the circuit than the relay.
  no voltage; open is between SW1 and relay (point B).
- Close the relay and probe at the solenoid.
  voltage; open is further down the circuit than the solenoid.
  no voltage; open is between relay and solenoid (point C).

Any powered circuit can be diagnosed using the approach in the previous example.

TESTING FOR “SHORTS” IN THE CIRCUIT

To simplify the discussion of shorts in the system, please refer to the following schematic.

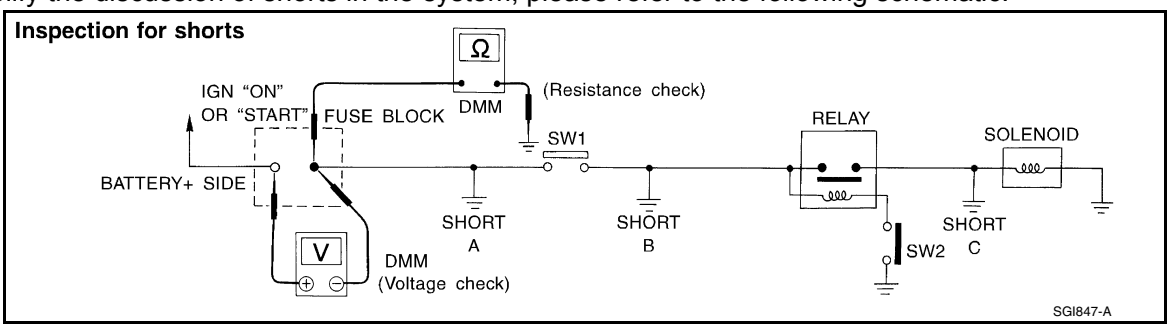

Resistance Check Method
- Disconnect the battery negative cable and remove the blown fuse.
- Disconnect all loads (SW1 open, relay disconnected and solenoid disconnected) powered through the fuse.
- Connect one probe of the DMM to the load side of the fuse terminal. Connect the other probe to a known good ground.
- With SW1 open, check for continuity.
  continuity; short is between fuse terminal and SW1 (point A).
  no continuity; short is further down the circuit than SW1.
- Close SW1 and disconnect the relay. Put probes at the load side of fuse terminal and a known good ground. Then, check for continuity.
  continuity; short is between SW1 and the relay (point B).
  no continuity; short is further down the circuit than the relay.
- Close SW1 and jump the relay contacts with jumper wire. Put probes at the load side of fuse terminal and a known good ground. Then, check for continuity.
  continuity; short is between relay and solenoid (point C).
  no continuity; check solenoid, retrace steps.

Voltage Check Method
- Remove the blown fuse and disconnect all loads (i.e. SW1 open, relay disconnected and solenoid disconnected) powered through the fuse.
- Turn the ignition key to the ON or START position. Verify battery voltage at the battery + side of the fuse terminal (one lead on the battery + terminal side of the fuse block and one lead on a known good ground).
- With SW1 open and the DMM leads across both fuse terminals, check for voltage.
  voltage; short is between fuse block and SW1 (point A).
  no voltage; short is further down the circuit than SW1.
- With SW1 closed, relay and solenoid disconnected and the DMM leads across both fuse terminals, check for voltage.
  voltage; short is between SW1 and the relay (point B).
  no voltage; short is further down the circuit than the relay.
- With SW1 closed, relay contacts jumped with fused jumper wire check for voltage.
  voltage; short is down the circuit of the relay or between the relay and the disconnected solenoid (point C).
  no voltage; retrace steps and check power to fuse block.

GROUND INSPECTION

- Ground connections are very important to the proper operation of electrical and electronic circuits. Ground connections are often exposed to moisture, dirt and other corrosive elements. The corrosion (rust) can become an unwanted resistance. This unwanted resistance can change the way a circuit works.
- Electronically controlled circuits are very sensitive to proper grounding. A loose or corroded ground can drastically affect an electronically controlled circuit. A poor or corroded ground can easily affect the circuit. Even when the ground connection looks clean, there can be a thin film of rust on the surface.

- When inspecting a ground connection follow these rules:
- Remove the ground bolt or screw.
- Inspect all mating surfaces for tarnish, dirt, rust, etc.
- Clean as required to assure good contact.
- Reinstall bolt or screw securely.
- Inspect for “add-on” accessories which may be interfering with the ground circuit.
- If several wires are crimped into one ground eyelet terminal, check for proper crimps. Make sure all of the wires are clean, securely fastened and providing a good ground path. If multiple wires are cased in one eyelet make sure no ground wires have excess wire insulation.
- For detailed ground distribution information, refer to “Ground Distribution” in PG section.

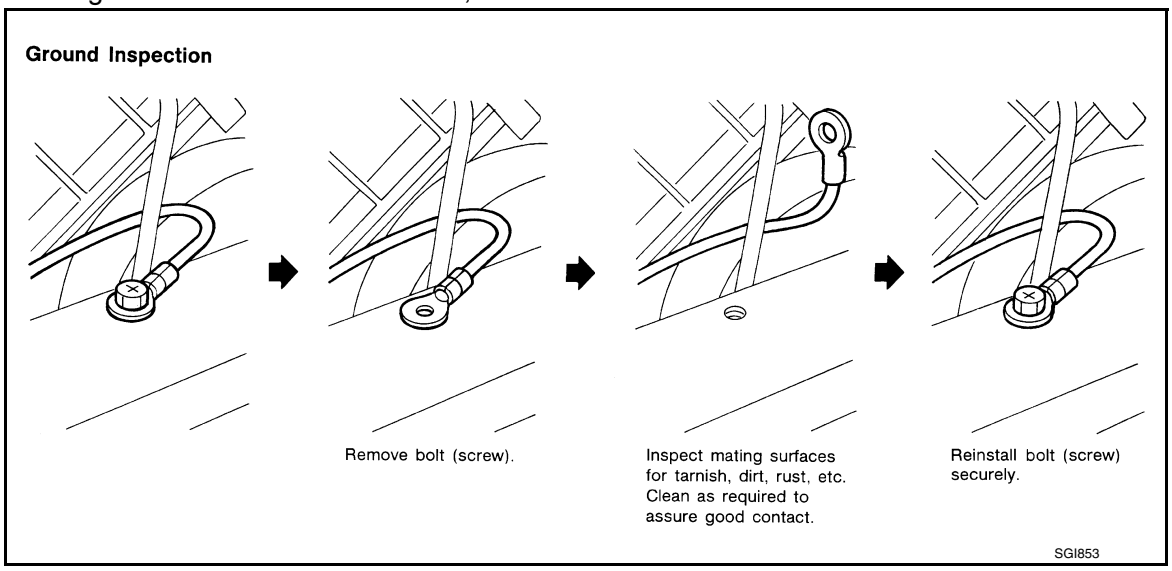

VOLTAGE DROP TESTS

- Voltage drop tests are often used to find components or circuits which have excessive resistance. A voltage drop in a circuit is caused by a resistance when the circuit is in operation.
- Check the wire in the illustration. When measuring resistance with DMM, contact by a single strand of wire will give reading of 0 ohms. This would indicate a good circuit. When the circuit operates, this single strand of wire is not able to carry the current. The single strand will have a high resistance to the current. This will be picked up as a slight voltage drop.
- Unwanted resistance can be caused by many situations as follows:
- Undersized wiring (single strand example)
- Corrosion on switch contacts
- Loose wire connections or splices.
- If repairs are needed always use wire that is of the same or larger gauge.

Measuring Voltage Drop — Accumulated Method

- Connect the DMM across the connector or part of the circuit you want to check. The positive lead of the DMM should be closer to power and the negative lead closer to ground.
- Operate the circuit.
- The DMM will indicate how many volts are being used to “push” current through that part of the circuit.

Note in the illustration that there is an excessive 4.1 volt drop between the battery and the bulb.

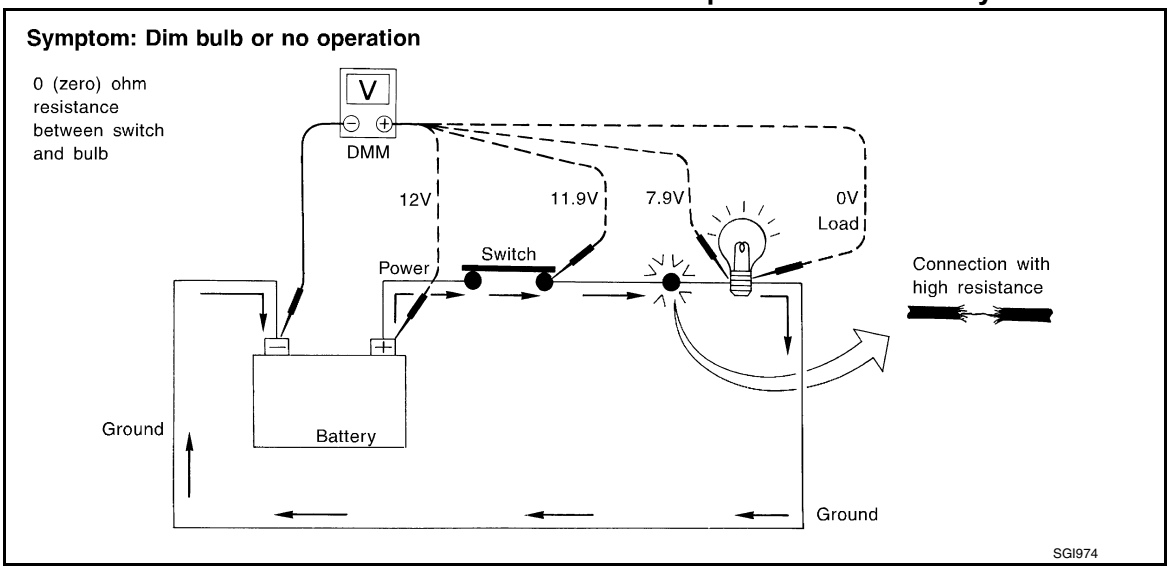

Measuring Voltage Drop — Step-by-Step

- The step-by-step method is most useful for isolating excessive drops in low voltage systems (such as those in “Computer Controlled Systems”).
- Circuits in the “Computer Controlled System” operate on very low amperage.
- The (Computer Controlled) system operations can be adversely affected by any variation in resistance in the system. Such resistance variation may be caused by poor connection, improper installation, improper wire gauge or corrosion.
- The step by step voltage drop test can identify a component or wire with too much resistance.

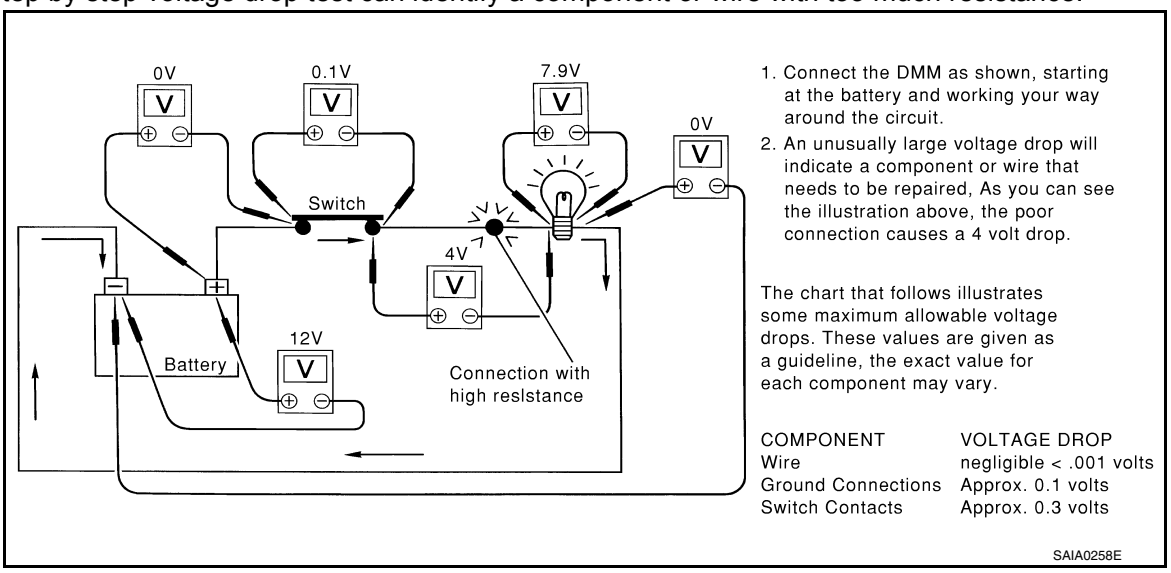

CONTROL UNIT CIRCUIT TEST

System Description

- When the switch is ON, the control unit lights up the lamp.

CASE 1

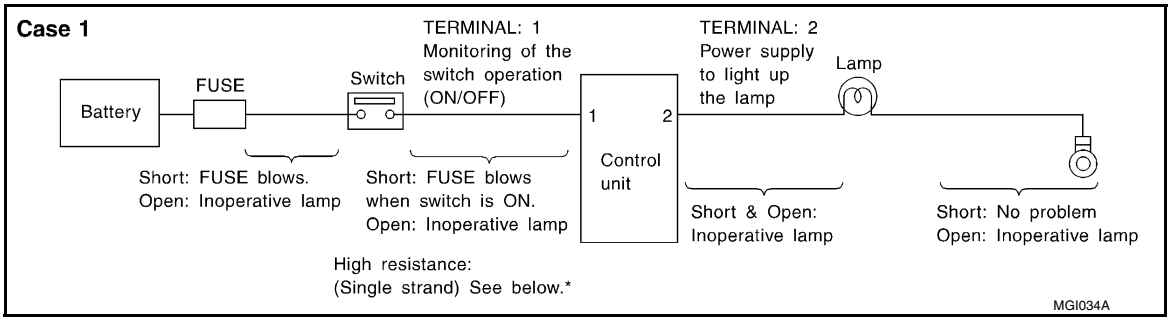

INPUT-OUTPUT VOLTAGE CHART

Terminal No.		Description		Condition	Value (Approx.)	In case of high resistance such as single strand (V) *
+	–	Signal name	Input/ Output			
1	Body ground	Switch	Input	Switch ON	Battery voltage	Lower than battery voltage Approx. 8 (Example)
				Switch OFF	0 V	Approx. 0
2	Body ground	Lamp	Output	Switch ON	Battery voltage	Approx. 0 (Inoperative lamp)
				Switch OFF	0 V	Approx. 0

- The voltage value is based on the body ground.
- *: If high resistance exists in the switch side circuit (caused by a single strand), terminal 1 does not detect battery voltage. Control unit does not detect the switch is ON even if the switch does not turn ON. Therefore, the control unit does not supply power to light up the lamp.

CASE 2

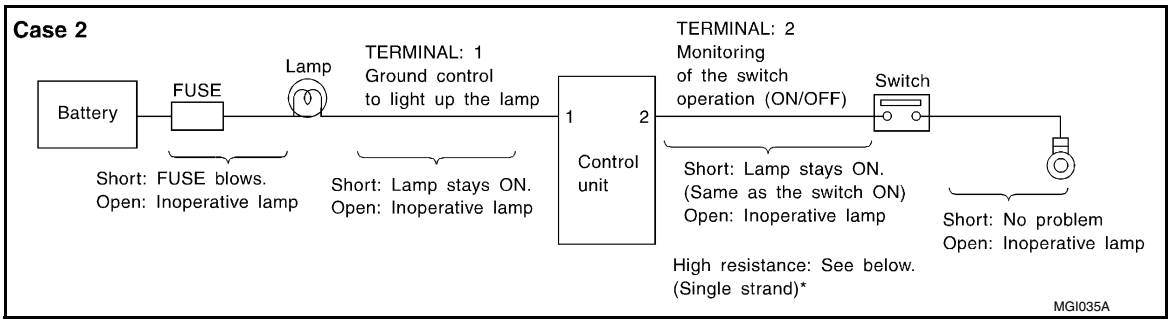

INPUT-OUTPUT VOLTAGE CHART

Terminal No.		Description		Condition	Value (Approx.)	In case of high resistance such as single strand (V) *
+	–	Signal name	Input/ Output			
1	Body ground	Lamp	Output	Switch ON	0V	Battery voltage (Inoperative lamp)
				Switch OFF	Battery voltage	Battery voltage
2	Body ground	Switch	Input	Switch ON	0 V	Higher than 0 Approx. 4 (Example)
				Switch OFF	5 V	Approx. 5

- The voltage value is based on the body ground.
- *: If high resistance exists in the switch side circuit (caused by a single strand), terminal 2 does not detect approx. 0V. Control unit does not detect the switch is ON even if the switch does not turn ON. Therefore, the control unit does not control ground to light up the lamp.

CONSULT/GST CHECKING SYSTEM

Description

INFOID:0000000009472988

NOTE:
This vehicle is diagnosed using the CONSULT-III plus.

- When CONSULT is connected with a data link connector equipped on the vehicle side, it will communicate with the control unit equipped in the vehicle and then enable various kinds of diagnostic tests.

  1 : Hood release handle
  2 : Data link connector

- Refer to “CONSULT-III plus Operation Manual” for more information.

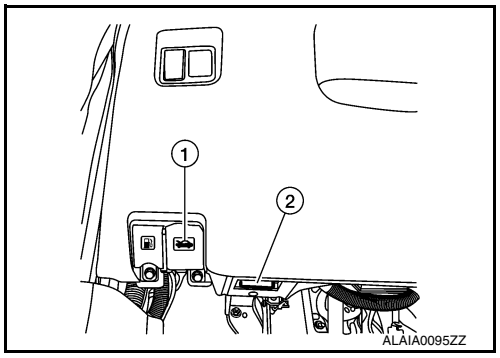

Function and System Application

INFOID:0000000009472989

Diagnosis (All Systems)	Description	ENGINE	ABS	METER/M&A	BCM	AIR BAG	TRANSMISSION[1]	EPS	IPDM E/R	AVM	MULTI AV	OCCUPANT DETECTION
Self Diagnostic Result	The ECU self diagnostic results are displayed.	x	x	x	x	x	x	x	x	x	x	-
Data Monitor	The ECU input/output data is displayed in real time.	x	x	x	x	x	x	x	x	x	x	-
Work support	The settings for ECU functions can be changed.	x	x	x	x	-	x	-	-	x	-	x
Active Test	The ECU activates outputs to test components.	x	x	-	x	-	-	-	x	-	-	-
ECU identification	The ECU part number is displayed.	x	x	-	x	x	x	x	x	x	x	-
DTC Work Support	The status of system monitoring tests and the self diagnosis status/results can be confirmed.	x	-	-	-	-	-	-	-	-	-	-
Warning History	Displays the history of the combination meter warning lamp indicators.	-	-	x	-	-	-	-	-	-	-	-
TROUBLE DIAG RECORD	Self diagnostic history and trouble diagnosis records in ECU are displayed.	-	-	-	-	x	-	-	-	-	-	-
CAN Diag	This mode displays network diagnostic results of CAN communication using a diagram.	x	x	x	x	x	x	x	x	x	x	-
CAN DIAG SUPPORT MNTR	The result of transmit/receive diagnosis of CAN communication is displayed.	x	x	x	x	x	x	x	x	x	x	-
Configuration	• The vehicle specification can be read and saved. • The vehicle specification can be written when replacing ECU.	-	-	-	x	-	-	-	-	-	-	-
CALIB DATA	The calibration values of the ECU are displayed.	-	-	-	-	-	x	-	-	-	-	-
SRT & P-DTC Confirmation	The status of system monitoring tests and the self diagnosis status/results can be confirmed.	x	-	-	-	-	-	-	-	-	-	-

x: Applicable
1: With continuously variable transmission

CONSULT Data Link Connector (DLC) Circuit

INFOID:0000000009472990

INSPECTION PROCEDURE

If the CONSULT cannot diagnose the system properly, check the following items.

Symptom	Check item
CONSULT cannot access any system.	• CONSULT DLC power supply circuit (Terminal 8) and ground circuit (Terminal 4)
CONSULT cannot access individual system. (Other systems can be accessed.)	• Power supply and ground circuit for the control unit of the system (For detailed circuit, refer to wiring diagram for each system.) • Open or short circuit between the system and CONSULT DLC (For detailed circuit, refer to wiring diagram for each system.) • Open or short circuit CAN communication line. Refer to LAN-15, "Trouble Diagnosis Flow Chart".

NOTE:

The DDL2 circuits and CAN communication lines from DLC pins 6, 7 and 14 may be connected to more than one system. A short in a DDL circuit or CAN lines connected to a control unit in one system may affect CONSULT access to other systems. For a complete DDL circuit layout, refer to GI-51, "Wiring Diagram - CONSULT/GST CHECKING SYSTEM". For a complete CAN line layout, refer to LAN-32, "Wiring Diagram".

Wiring Diagram - CONSULT/GST CHECKING SYSTEM
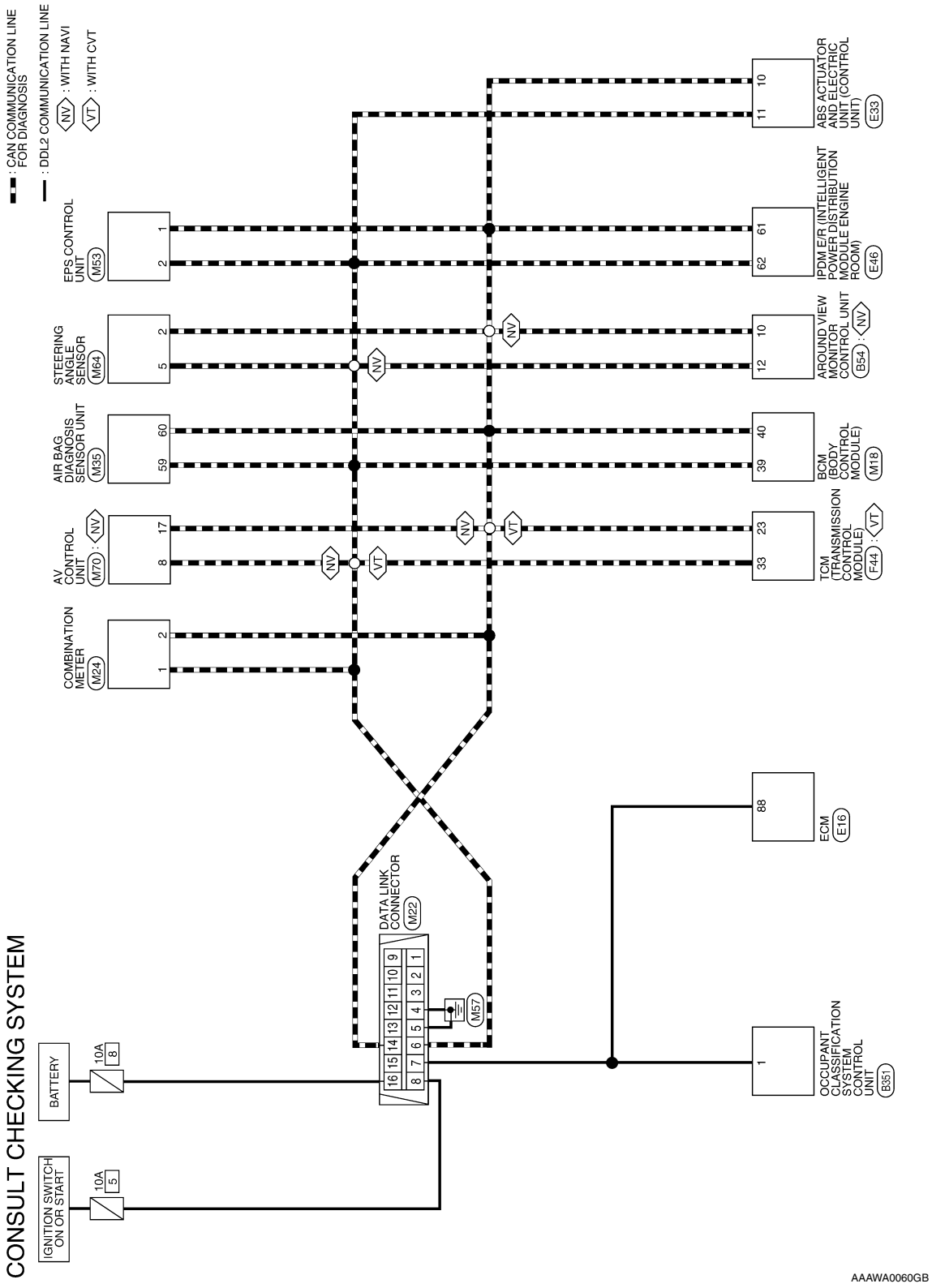
INFOID:0000000009472991